HRG413K1SDI(199 (775391988,ext775391988)

B-1 CARTER DE COUPE / SAC A HERBE

T.D.R	Description du TDR
aucun enregistrement trouvé	

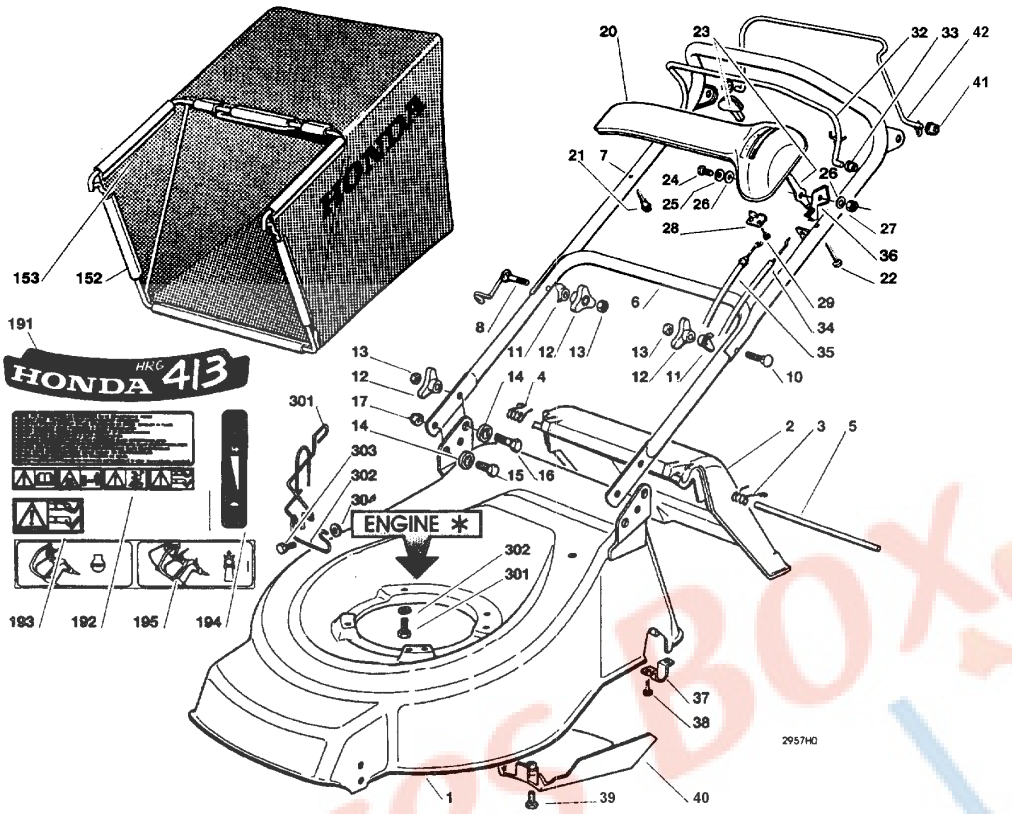

n°de référence	référence	Description	Qte unitaire	Types
1	CG81001690H0	CAPOT GRIS	1	SDI
2	CG22600046H1	PARE-PIERRE	1	SDI
3	CG22450420H1	LEFT SPRING	1	SDI
4	CG22450410H1	RIGHT SPRING	1	SDI
5	CG22517906H0	AXE	1	SDI
6	CG81006990H0	LOWER HANDLE	1	SDI
7	CG81007024H0	UPPER HANDLE	1	SDI
8	CG81003801H0	RESSORT	1	SDI
10	CG12819201H0	VIS	1	SDI
11	CG22680006H1	RONDELLE	2	SDI
12	CG22399900H0	POIGNEE	4	SDI
13	CG12293200H0	ECROU	4	SDI
14	CG22041955H0	BAGUE	4	SDI
15	CG112792610H0	VIS	2	SDI
16	CG12793700H0	VIS	2	SDI
17	CG12155000H0	VIS	2	SDI
20	CG22120157H0	DASH BOARD	1	SDI
21	CG22943006H0	VIS	1	SDI
22	CG12728460H0	VIS	1	SDI
23	CG81007280H2	LEVER + KNOB ASSY.	1	SDI
24	CG12791500H0	VIS	1	SDI
25	CG12530060H0	SPRING WASHER	1	SDI
26	CG12523040H0	RONDELLE	2	SDI
27	CG12154510H0	ECROU	1	SDI
28	CG22981467H0	PLAQUE	1	SDI
29	CG12735105H0	VIS	2	SDI
32	CG81003291H2	LEVIER DE FREIN	1	SDI
33	CG22041966H0	BAGUE	2	SDI
34	CG81007159H0	CÂBLE GAZ	1	SDI
35	CG81000638H0	THREAD MOTOR BRAKE	1	SDI
36	CG12731350H0	VIS	4	SDI
36	CG22545171H0	PLAQUE	1	SDI
37	CG22545152H0	PLAQUE	2	SDI

39	CG12727791H0	VIS	1	SDI
40	CG22060191H0	PONT	1	SDI
41	CG22041965H0	BAGUE	1	SDI
42	CG81003288H1	DRIVING LEVER	1	SDI
152	CG81006418H0	BAG FRAME	1	SDI
153	CG81002175HO	DESCRIPTION IS NOT AVAILABLE	1	SDI
153	CG81008609H0	DASH-BOARD OUTFIT	1	SDI
153	CG81008614H0	SAC A HERBE	1	SDI
191	CG14357279H0	EMBLEME	1	SDI
192	CG14356933H0	WARNING LABEL	1	SDI
193	CG14356699H0	ETIQUETTE	1	SDI
194	CG14356743H0	DASH-BOARD LABEL	1	SDI
195	CG14356690H1	DASH-BOARD LABEL	1	SDI
301	18433ZG1U10	PROTECTION DE SILENCIEUX (A)	1	SDI
302	18434ZG1U10	PLAQUE DE GARDE B, SILENCIEUX	1	SDI
303	900611610000	BOULON	2	SDI
304	9410106000	RONDELLE PLATE, 6MM	2	SDI
306	CG12583500H0	RONDELLE GROWER	3	SDI
307	CG12793102H0	VIS	3	SDI

Pièces Box.fr

HRG413K1SDI(199 (775391988,ext775391988)

B-2 ROUE / TRANSMISSION / LAME

T.D.R	Description du TDR
aucun enregistrement trouvé	

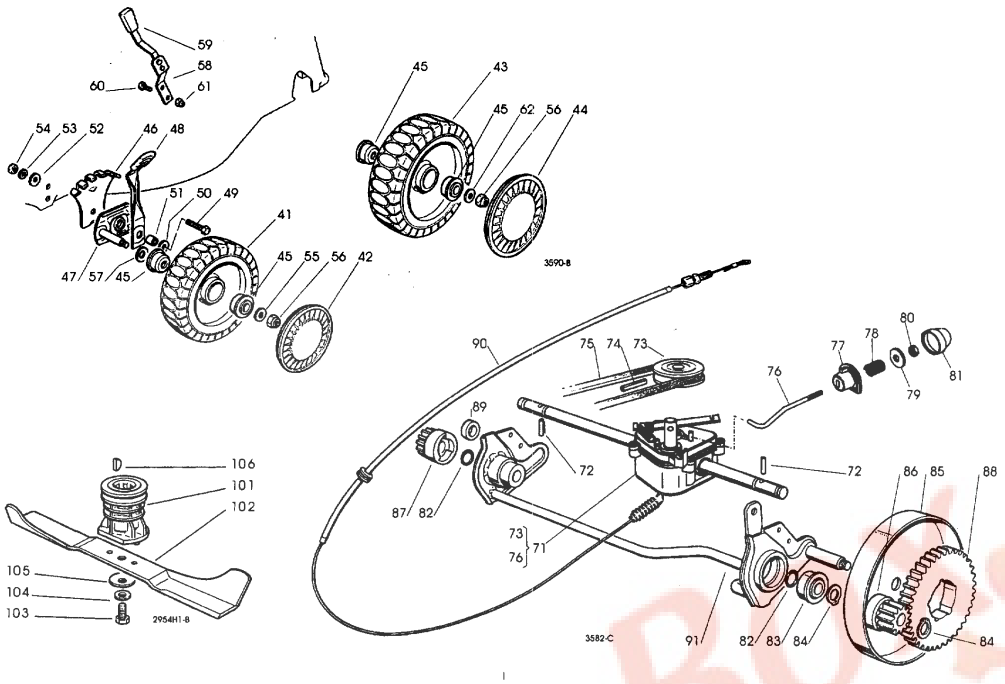

n°de référence	référence	Description	Qte unitaire	Types
41	CG81007317H0	WHEEL Ø 170	2	SDI
42	CG22110282H0	HUB CAP	2	SDI
43	CG81007318H1	WHEEL Ø 210	2	SDI
44	CG22110281H0	HUB CAP	2	SDI
45	CG22122200H0	ROULEMENT	8	SDI
45	CG81003285H0	ADJUSTMENT LEVER	2	SDI
46	CG22735547H0	ADJUSTMENT SECTOR	2	SDI
47	CG81005082H0	WHEEL SUPPORT	2	SDI
49	CG12793701H0	VIS	2	SDI
50	CG12521350H0	RONDELLE	2	SDI
51	CG22171001H0	ENTRETOISE	2	SDI
52	CG12523070H0	RONDELLE	2	SDI
53	CG12583500H0	RONDELLE GROWER	2	SDI
54	CG12293200H0	ECROU	2	SDI
55	CG12521350H0	RONDELLE	4	SDI
56	CG12155000H0	VIS	4	SDI
57	CG12530150H0	RONDELLE ELASTIQUE	2	SDI
58	CG81003279H0	DESCRIPTION IS NOT AVAILABLE	1	SDI
59	CG223970000	DESCRIPTION IS NOT AVAILABLE	1	SDI
60	CG12789000H0	VIS	2	SDI
61	CG12154330H0	ECROU	2	SDI
62	CG12369500H0	RONDELLE ELASTIQUE	2	SDI
71	CG81003059H0	GEAR BOX ASSY.	1	SDI
72	CG22753000H0	AXE	2	SDI
73	CG22601904H0	POULIE	1	SDI
74	CG12645705H0	AXE	1	SDI
75	CG35063710H0	COURROIE	1	SDI
76	CG22033280H0	ADJUSTMENT ROD	1	SDI
77	CG22041957H0	BAGUE	1	SDI
78	CG22450063H0	RESSORT	1	SDI
79	CG22680009H0	RONDELLE	2	SDI
80	CG12154510H0	ECROU	2	SDI
81	CG22110230H0	COUVRE MOYEU	2	SDI
82	CG12019900H0	JOINT TORIQUE	2	SDI
83	CG22034508H0	BAGUE	2	SDI
84	CG12608600H0	CIRCLIP	4	SDI
85	CG81006846H0	WHEEL GUARD	2	SDI
86	CG22570120H0	LEFT PINION	1	SDI

87	CG22570110H0	RIGHT PINION	1	SDI
88	CG22120105H1	COURONNE DENTEE	2	SDI
89	CG22170800H0	ENTRETOISE	1	SDI
90	CG81001143H0	REAR DRIVE	1	SDI
91	CG81001252H1	REAR WHEELS AXLE	1	SDI
101	CG22465607H0	MOYEU	1	SDI
102	CG81004396HO	LAME	1	SDI
103	CG12735698H0	VIS	1	SDI
104	CG12523080H0	RONDELLE	1	SDI
105	CG22160400H0	CACHE ANTI-POUSSIERE	1	SDI
106	CG12139100H0	CLAVETTE	1	SDI

Pièces Box.fr