HONDA
POWER PRODUCTS

GENERATOR

EG5500CX
EG6500CX
EG5500CXS
EG6500CXS
EG5500CL

PARTS CATALOGUE

2

13Z30B02

© Honda Motor Co., Ltd. 2010

Pièces Boxoff.fr

FOREWORD INDEX 1

ENGINE GROUP 2

FRAME GROUP 3

PART NUMBER INDEX 4

PART NAME INDEX 5

Pièces Boxoff.fr

Pièces Box.fr

Instruction for use of parts catalogue

- **This parts catalogue was prepared based on the latest information available as of October 10, 2010.**
  - See the parts catalogue news for any revision that is made after October 10, 2010.
- **Always specify the part number when ordering a part.**
  - Check the model, type, serial numbers, color, maker, and the size as needed before ordering a part.
  - Note that the illustrations (part drawings) can differ from the actual parts in shape.
    They are given just to help you to refer to the parts.
- **When modifications or additions to this parts catalogue are made, a revised edition will be issued at an appropriate time, with successively progressing revision numbers on the cover. We recommend obtaining such revisions in order to keep your parts catalogue up-to-date at all times. To check whether a parts catalogue revision has been issued, please contact your Honda distributor.**

Initial version issue date July 01, 2010
Honda Motor Co., Ltd.

CONTENTS

	Page	Address No.	
Instruction for use of parts catalogue	1	B 1	1
How to refer to the part information	2	B 2	
Part catalogue structure	3	B 3	
When the parts were revised	4	B 4	
Abbreviations used in the parts catalogue	4	B 4	
How to check the part block and serial numbers	5	B 5	
Models, parts catalogue codes and applicable serial numbers	6	B 6	
Features of each type	7	B 7	
Fuel hose, general purpose hoses and vinyl hose	8	B 8	
FLAT RATE SERVICE TIME	9	B 9	
Illustrated index	14	B14	
ENGINE GROUP	19	D 1	2
FRAME GROUP	42	F 1	3
PART NO. INDEX	77	I 1	4
PART NAME INDEX	81	J 1	5

How to refer to the part information

Ⓐ Reference with “Illustrated index”

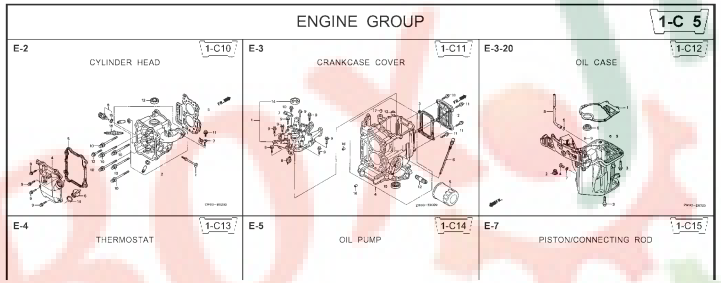

Ⓑ Reference with “Part number index”

PART NO. INDEX

Part Number	Address	Page	Ref.
06000			
06316-ZW9-000	1-G9	88	1
11000			
11300-ZW9-405	1-C11	27	1
11300-ZW9-406	1-C11	27	1
11340-ZW9-000	1-C11	27	2
11342-ZW9-000	1-C11	27	3
11381-ZW9-003	1-C12	28	1
12000			
12000-ZW9-405ZA	1-C11	27	4
12155-ZV4-A00	1-C13	29	1
12166-ZW9-000	1-C10	26	1
12209-GB4-681	1-C16	32	1
12210-ZW9-405ZA	1-C10	26	2
12216-ZE2-300	1-E8	55	1
	1-E11	58	1
15212-ZW9-000	1-C14	30	
15220-ZW9-003	1-C14	30	
15332-ZW9-000	1-E8	55	
15332-ZW9-A30	1-E11	58	
15400-PFB-004	1-C11	27	
15422-ZW9-000	1-C14	30	
15473-881-000	1-C14	30	
15474-ZW9-000	1-C14	30	
15611-921-000	1-C10	26	
15655-ZW9-000	1-C11	27	
16000			
16010-ZV4-005	1-D4	36	
16011-ZV4-005	1-D4	36	
16013-ZW9-003	1-D4	36	
16016-ZW9-003	1-D4	36	
16016-ZW9-721	1-D4	36	
16023-ZW9-003	1-D4	36	
16024-ZV4-650	1-D4	36	
16028-ZV4-650	1-D4	36	

Ⓒ Reference with “Part name index”

PART NAME INDEX

Part name	Address	Page	Ref.	
[A]				BOLT ,
ABSORBER ,FUEL	1-E15	62	5	
ARMATURE COMP.	1-D11	43	7	BOLT ,
ARM COMP. ,LINK JOINT	1-G6	85	18	BOLT ,
ARM COMP. ,SHIFT LINK	1-G6	85	14	BOLT ,
ARM COMP. ,TILT	1-F15	79	20	
ARM ,FUEL PUMP ROCKER	1-C16	32	4	
ARM ,REVERSE LOCK	1-F15	79	18	
ARM ,SHIFT LINK	1-F11	74	7	
ARM ,STOPPER	1-D1	33	12	BOLT ,
ARM ,THROTTLE REMOTE	1-F11	74	6	
ARM ,VALVE ROCKER	1-C16	32	3	
[B]				
BAG ,TOOL ,160MM	1-G5	84	10	
BAND	1-G6	86	37	
BAND B1,WIRE	1-F6	69	1	
BAND ,CORD	1-F3	67	18	BOLT ,
BAND ,TUBE CLIP ,11MM	1-E15	63	20	
BAND ,TUBE CLIP ,12.5MM	1-E15	63	19	BOLT ,

Address No.

E-2 CYLINDER HEAD 1-C10

Block No.

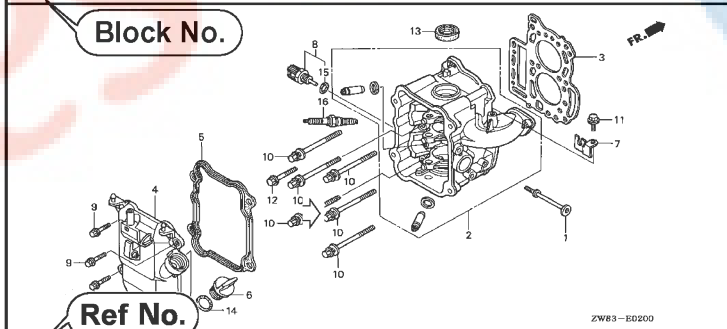

Service item	F.R.T.
O-RING, 26X2.7	0.1
.PLUG, SPARK	
O-RING, 9.5X1.5	0.2
.SENSOR ASSY., WATER TEMPERATURE	
COVER COMP., HEAD	0.3
.PACKING, HEAD COVER	
GASKET, CYLINDER HEAD	1.8
OIL SEAL, 20X32X6	2.4
HEAD COMP., CYLINDER	3.1

Ref. No.

Ref. No.	Part No.	Description	BF 9.9D1	BFP 9.9D1	BF 10D1	BFP 10D1	BF 10B1	BFP 10B1	Serial No.	Parts catalogue code
1	12166-ZW9-000	STOPPER, ENGINE SIDE	2	2	2	2	2	2		
2	12210-ZW9-000ZA	HEAD COMP., CYLINDER *NH8*.....DARK GRAY	1	1	1	1	1	1		
3	12251-ZW9-003	GASKET, CYLINDER HEAD	1	1	1	1	1	1		
4	12310-ZW9-000	COVER COMP., HEAD	1	1	1	1	1	1		
5	12312-ZW9-000	PACKING, HEAD COVER	1	1	1	1	1	1		
6	15611-921-000	CAP, OIL (NO GAUGE)	1	1	1	1	1	1		
7	16617-ZW9-000	HOLDER, CABLE	1	1	1	1	1	1	-------- --------	SC,SG
	16617-ZW9-010		1	1	1	1	1	1	-------- 1001800	LHC,LHD
			1	1	1	1	1	1	1001801 --------	LHC,LHD
8	35673-ZW5-003	SENSOR ASSY., WATER TEMPERATURE	1	1	1	1	1	1		
9	90003-ZW9-000	BOLT, FLANGE, 6X22	4	4	4	4	4	4		
10	90007-ZW9-003	BOLT, FLANGE, 8X83	6	6	6	6	6	6		
11	90011-ZW9-000	BOLT, FLANGE, 6X14(CT200)	1	1	1	1	1	1		
12	90020-ZW9-000	BOLT, FLANGE, 8X40	2	2	2	2	2	2		
13	91202-KJ9-003	OIL SEAL, 20X32X6	1	1	1	1	1	1		
14	91301-805-000	O-RING, 26X2.7	1	1	1	1	1	1		
15	91307-PK2-005	O-RING, 9.5X1.5(HONDA KIKAKI)	1	1	1	1	1	1		
16	98059-55916	PLUG, SPARK (CR5EH-9)	2	2	2	2	2	2		
	98059-55926	PLUG, SPARK (U16FER9)	2	2	2	2	2	2		

Ref. No.

44

2000.09.20 E

Page No.

Part catalogue structure

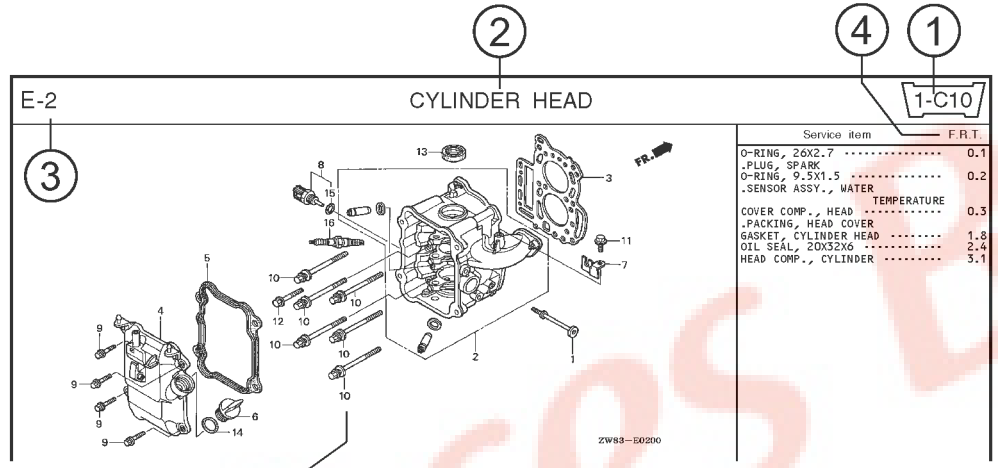

5 6 7 8 9 10 11 12 13 14

Ref. No.	Part No.	Description	Reqd. QTY BF 9.9D1	BFP 9.9D1	BF 10D1	BFP 10D1	BF 10B1	BFP 10B1	Serial No.	Parts catalogue code
1	12166-ZW9-000	STOPPER, ENGINE SIDE	2	2	2	2	2	2		
2	12210-ZW9-000ZA	HEAD COMP., CYLINDER *NH8*.....DARK GRAY	1	1	1	1	1	1		
3	12251-ZW9-003	GASKET, CYLINDER HEAD	1	1	1	1	1	1		
4	12310-ZW9-000	COVER COMP., HEAD	1	1	1	1	1	1		
5	12312-ZW9-000	PACKING, HEAD COVER	1	1	1	1	1	1		
6	15611-921-000	CAP, OIL ..... (NO GAUGE)	1	1	1	1	1	1		
7	16617-ZW9-000	HOLDER, CABLE	1	1	1	1	1	1	-------- --------	SC,SG
	16617-ZW9-010	.....	1	1	1	1	1	1	-------- 1001800	LHC,LHD

16 15 17

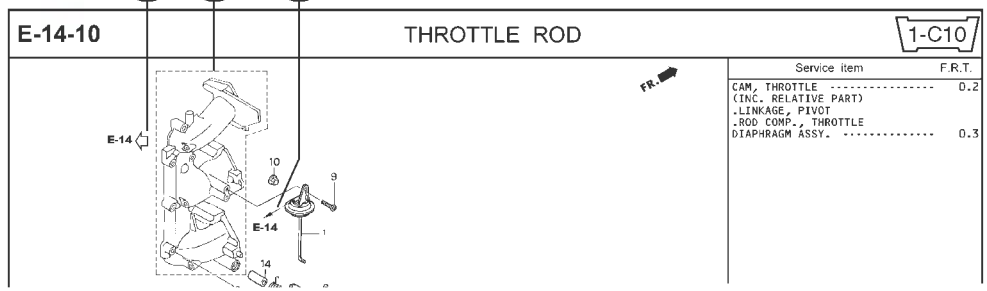

① Address number
- Address No. is provided (in place of the page No.) to help you refer to the part with the part No. or part name.

② Block title ③ Block number

④ Service item/Flat rate time

⑤ Reference number
- Title number marked with the parenthesis or parentheses indicates that it continues from the previous page.

⑥ Part number ⑦ Honda color code

⑧ Description

⑨ Assemblies
- Sections framed with broken lines in the exploded view drawings are available as complete assemblies. (Their individual parts can also be obtained.)

⑩ Color description

⑪ Note
- Notes are shown with the parentheses in the part name column.

⑫ Required quantity
- Required QTY shown in the parenthesis or parentheses indicates the optional part.
- Required QTY marked with “N” Indicates the optional part that should be selected as needed.
- Required QTY indicates the number of the part used in the block.

⑬ Serial number

⑭ Type
- When the type column is blank, it indicates that the part is applicable to all types.
- As the type of the actual unit may differ from the “parts catalogue, type” please refer to “Models, types and applicable serial numbers” for confirmation.

⑮
- Parts enclosed within a dotted line ⬚ are covered in a different block.

⑯
- A hollow arrow ⇦ indicates the block No. for the parts enclosed within a dotted line ⬚ .

⑰
- A solid arrow ⟵ indicates the block No. the part in question is connected to.

When the parts were revised

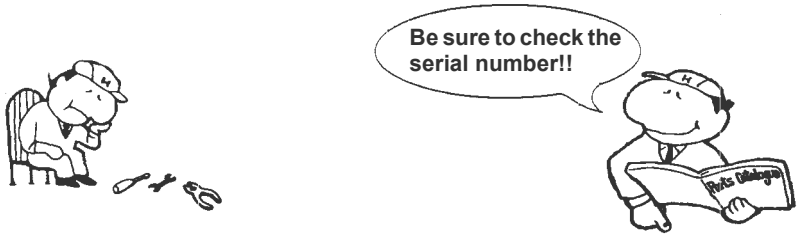

Ref. No.	Part No.	Description	Reqd. QTY BF 9.9D1	BFP 9.9D1	BF 10D1	BFP 10D1	BF 10B1	BFP 10B1	Serial No.
1	12166-ZW9-000	STOPPER, ENGINE SIDE	2	2	2	2	2	2	
2	12210-ZW9-000ZA	HEAD COMP., CYLINDER *NH8*.....DARK GRAY	1	1	1	1	1	1	
3	12251-ZW9-003	GASKET, CYLINDER HEAD	1	1	1	1	1	1	
4	12310-ZW9-000	COVER COMP., HEAD	1	1	1	1	1	1	
5	12312-ZW9-000	PACKING, HEAD COVER	1	1	1	1	1	1	
6	15611-921-000	CAP, OIL (NO GAUGE)	1	1	1	1	1	1	
7	16617-ZW9-000	HOLDER, CABLE (###)	1	1	1	1	1	1	------- ------- SC,SG
	16617-ZW9-010		1	1	1	1	1	1	------- 1001800 LHC,LHD
			1	1	1	1	1	1	1001801 ------- LHC,LHD

The number has been used from the initial model without revision.

When shown at the left side, it is applicable to the models of No.1001801 and the subsequent numbers.

When shown at the right side, it is applicable to the models up to No.1001800.

- The parts listed with "###" at the end of the parts name have limited supply period (parts not for sale).

Abbreviations used in the parts catalogue

- **The following abbreviations are used in the parts name column.**

A ..... Ampere
A.C. ..... Alternating current
ASSY. .... Assembly
AT. ..... Automatic transmission
C.D.I. ..... Capacitive discharge ignition
COMP. ... Complete
D.C. ..... Direct current
EX. ..... Exhaust
G.F.C.I ... Ground fault circuit interruptor
HEX. ..... Hexagonal
H.S.T. .... Hydrostatic transmission
FR. .....Front
IN. .....Inlet
L (100L) .Link (100 Links)
L. .....Left
MM .....Millimeter
MT. .....Manual Transmission
P.T.O. .....Power take off
R. .....Right
RR. .....Rear
STD. .....Standard
T (22T) ...Tooth (22 Teeth)
V .....Volt
W .....Watt

How to check the part block and serial numbers

Part block	Engine parts E-2~	Carburetor parts E-14~	Frame parts F-2~
Numbers needed	Stamped engine number	Stamped carburetor identification number	Stamped frame number
Check point	①	②	③

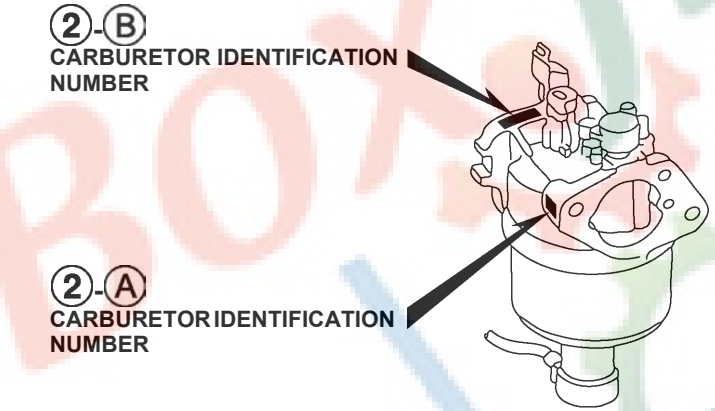

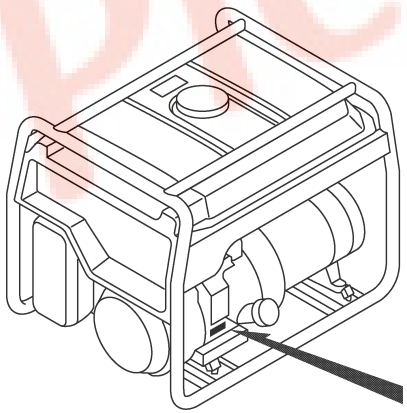

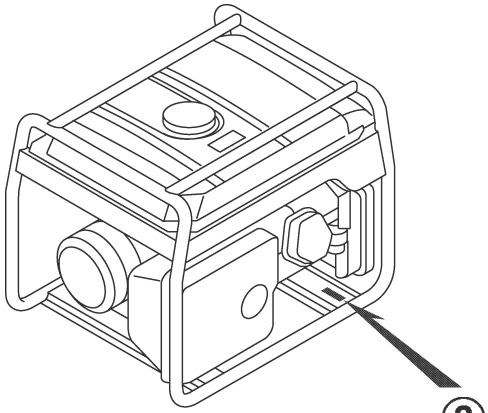

Models, parts catalogue codes and applicable serial numbers

- **Models, parts catalogue codes and applicable serial Nos. given in this parts catalogue can be identified as follows.**

Model	Type	Parts catalogue type	Engine		Applicable engine serial No.	Applicable frame serial No.	Applicable carburetor identification No.
			Model	Type			
EG5500CX	UH	UH	GX390H1	ED1	GCAFH-0000001~	EBCC-1000001~	BE89V A
EG6500CX	KH	KH					
	LDH	LDH					
	LTH	LTH					
	MH	MH					
	RH	RH					
	SH	SH					
	SKH	SKH					
EG5500CXS	RGH	RGH		ED2		EBDC-1000001~	
	UH	UH					
EG6500CXS	KH	KH					
	LDH	LDH					
	LTH	LTH					
	MH	MH					
	RH	RH					
	SH	SH					
	SKH	SKH					
EG5500CL	BT	BT	GX390T2	ED1	GCBDT-1000001~	EBBC-1000001~	BE95A A
	FT	FT					
	GT	GT					
	GWT	GWT					
	ITT	ITT					

* Of carburetor identification numbers, only the portions underlined in the example below are used for registration.

BE 89V A KC ナ
Ⓐ Ⓑ

Features of each type

- See the following table for the features of each type. (Items in brackets are optional)

Specifications \ Model		EG5500CX	EG6500CX						
	Type	UH	KH	LDH	LTH	MH	RH	SH	SKH
Rated output	5.0kVA	●	●			●	●		
	5.5kVA			●	●			●	●
	3.68/5.0kVA								
Spark arrester		●							
Starter motor									

Specifications \ Model		EG5500CXS		EG6500CXS					
	Type	RGH	UH	KH	LDH	LTH	MH	RH	SH
Rated output	5.0kVA	●	●	●			●	●	
	5.5kVA				●	●			●
	3.68/5.0kVA								
Spark arrester			●						
Starter motor		●	●	●	●	●	●	●	●

Specifications \ Model		EG6500CXS	EG5500CL				
	Type	SKH	BT	FT	GT	GWT	ITT
Rated output	5.0kVA			●	●	●	●
	5.5kVA	●					
	3.68/5.0kVA		●				
Spark arrester			●	●	●	●	●
Starter motor		●					

Fuel hose, general purpose hoses and vinyl hose

- The standard part fuel hose, general purpose hose and vinyl hose may be substituted by the coiled bulk part.
- When ordering the standard part fuel hose, general purpose hose and vinyl hose use the bulk part number written in the parts catalog in brackets ( ) underneath the part name.
- When exchanging the hose, cut and use at the specified length as mentioned in the part name.
  (For the method of cutting the bulk part, and method of filling out orders etc., please refer to the instructions issued with the bulk part.)

Bulk part number of fuel hose, general purpose hose and vinyl hose.

Example: 9 5 0 0 1 - 7 5 0 0 1 - 5 0 M

Bulk part number:
Refers to the bulk part.

Marking code (fuel hose and general purpose hose)
Change code (Vinyl hose)
Indicates number mark or change sequence, however, the code for the bulk part must be strictly 0 (zero).

Types of code:

- Fuel hose
  - 2: Red outside braid (3 mm inside dia. only)
  - 5: Black inside braid
  - 3: Red (3 mm inside dia. only)
  - 4: Ash gray with red stripe (3 mm inside dia. only)
  - 6: Black
- General hose
  - 1: Ash gray
  - 2: Ash gray
  - 3: Black
  - 5: Black
- Vinyl hose
  - 1: Clear
  - 2: Black
  - 3: Light red
  - 6: Light red
  - 7: Pale black

Lengths:
001: 1 m (standard)
003: 3 m
008: 8 m
} Application or specification of some parts is not settled.

I.D code: (fuel hose and general purpose hose)

30: 3.0 mm	50: 5.0 mm	70: 7.0 mm	11: 11 mm	12: 12 (outside dia. 17) mm
35: 3.5 mm	55: 5.3 mm, 5.5 mm	75: 7.3 mm, 7.5 mm	91: 12 (outside dia. 15) mm	14: 14 mm
45: 4.5 mm	65: 6.5 mm	80: 8.0 mm	92: 12 (outside dia. 16) mm	17: 17 mm

ID./OD. code: (vinyl hose)

01: ID. 2.9, OD. 6.8 mm	12: ID. 5.0, OD. 7.0 mm	21: ID. 8.0, OD. 9.0 mm	37: ID. 11.0, OD. 15.0 mm	50: ID. 16.0, OD. 19.0 mm
03: ID. 3.0, OD. 6.0 mm	10: ID. 5.0, OD. 8.0 mm	23: ID. 8.0, OD. 12.0 mm	38: ID. 12.0, OD. 13.0 mm	55: ID. 17.5, OD. 20.5 mm
05: ID. 3.5, OD. 6.5 mm	11: ID. 5.0, OD. 9.0 mm	25: ID. 9.0, OD. 11.0 mm	39: ID. 12.0, OD. 14.0 mm	60: ID. 22.0, OD. 27.0 mm
07: ID. 4.0, OD. 7.0 mm	14: ID. 6.0, OD. 9.0 mm	27: ID. 9.0, OD. 13.0 mm	40: ID. 12.0, OD. 16.0 mm	
08: ID. 4.5, OD. 6.5 mm	17: ID. 7.0, OD. 9.0 mm	33: ID. 10.0, OD. 14.0 mm	43: ID. 13.0, OD. 15.0 mm	
09: ID. 4.5, OD. 8.0 mm	19: ID. 7.0, OD. 11.0 mm	36: ID. 11.0, OD. 13.0 mm	45: ID. 14.0, OD. 18.0 mm	

Hose type:
1: Fuel hose
3: Vinyl hose
5: General hose

◎ **CAUTION: It is DANGEROUS to confuse the fuel hose with the general purpose hose or vinyl hose.**
Never use a general purpose hose or vinyl hose in place of a fuel hose or vice versa. Always use the correct bulk part in the parts catalogue, according to the service manual or the instructions issued with the bulk part.

FLAT RATE SERVICE TIME

Flat rate service time (FRT) means the standard time required to service a product, which is listed in this manual to help the dealers control the actual working process and calculate the service charge by using it as a guide.

FRT setting system

- Net service time
  - Removal, Disassembly/reassembly, Installation
  - Inspection, Measurement, Adjustment, Confirmation
  - Diagnosis/troubleshooting (Electric system)
  - Completion inspection
- Float time
  - Preparation (Process check, Confirmation arrangement for necessary tools)
  - Related work (Transfer of products)

* Float time is set by multiplying the net service time by a given coefficient.

Editorial style

The service items shown in the text are listed with the exchange work time for the repair sales parts as the subject. Other representative service items not using repair parts (removal/installation, adjustment, inspection/measuring, and other work) are listed collectively in the list in the preface, classified according to the work.

FRT setting standard

- Decimal system (in unit of 0.1) is adopted to set FRT as it is convenient to calculate the wage.
  Example: (0.1) → 6 minutes, (0.2) → 12 minutes
  [Labor cost per hour] x [FRT] = [Wage]
- FRT is set with a hand tool.
- Service items and FRT can be subject to change depending on development of tools and service equipment and improvement in service procedure.

Work procedure

- As the work procedure is set with the work time according to the method in the separate Service Manual, refer to this Manual as required.
- Work methods permitting servicing in the shortest time still permitting assurance of safe work and product warranty are used for the setting of service items not listed in the Service Manual.
- Work basically is to be performed by one person, and when two or more people are required, setting is done as the total time for the number of people.
- The set value for the technological level of the workers uses a person with three years of experience in the repair of Honda products as the standard.
- Special tools and service equipment used to set FRT are those specified or recommended in Service Manual.

Service item whose FRT is not presented

- Accessories and service parts that are not listed to use in this manual.
- Locations with little aging deterioration or breakage during normal use.
- Service work that can be finished by one touch.
- Service work that is seldom done (i.e. extremely small causes of trouble and service frequency).
- Products and parts whose location for installation differs according to its status of use and application.

* When FRT is not presented, please calculate wages based on appropriate actual work time.

Operation not included of FRT

- Oil and coolant water drainig, Waiting time for warming up operation and etc..
- Additional operation that involves removal/installation of standard exterior equipment.
- Indirect time spent for service by visiting the customer, trade-in, and delivery.
- Indirect time required for ordering and delivery of parts.
- Cost for grease, adhesive agent, etc. used for service work.

Explanation of FRT by using an example
(The example may differ from the actual presented items)

Ref. No.	L.O.N.	(Relative ref. Number) Description	F.R.T.
		(1, 3, 4, 7)	
	1111L1	VALVE, INTAKE • • • • • • • • • • • • • • 4.1	
		• NOTE: OHV type	
		• Includes: Engine removal and installation	
	1111L1A	One head (intake all) add • 1.4	

①Reference No. of the illustration of part that shows location of the replacement work.

②FRT is an abbreviation of Flat Rate Time indicating the standard service time required for the replacement.

③LON is an abbreviation of Labor Operation Number, and it is a classification of the service items by the work unit code.

The same operation code is used regardless of the models.

Standard operation is indicated with 6 digits code, and additional operation is indicated with 7 digits code.

④Indicating the intake valve replacement and FRT4.1.

⑤Indicating FRT1.4 that will be added when additional operation (whole intake side of one cylinder head) is done in association with intake valve replacement.

⑥Indicating work condition or application condition of the service item.

⑦Indicating work contents that are included in the service item.

⑧Indicating a reference No. whose operation and time are the same as FRT4.1 for the intake valve.

(The application range is limited to the service items without an LON setting within a same block.)

How to refer to the service item by using the sample
(intake valve replacement)

Open to the page of the block where the intake valve's spare part illustration is shown.

Look for the intake valve illustration, and refer to the service item and FRT that agree with the reference No.

Indication mark for the listing of service items that continues to the following page

Ref. No.	L.O.N.	(Relative ref. Number) Description	F.R.T.
2	1111L1	VALVE, INTAKE • • • • • • • • • • • •	4.1
	•	•	•
	•	•	•
+			

Mark indicated at the last line.

Indication of the block with no setting of FRT

Ref. No.	L.O.N.	(Relative ref. Number) Description	F.R.T.
NO INFORMATION •			

- **LON code system**

1	11	1	L1	A
a	b	c	d	e

a) Category code..... Engine
b) Location/function code ..... Engine upper
c) Operation code..... Replace
d) Operation sequence number (Unit code can be shown with alphabet)
..... Intake valve
(No regular rule of code)
e) Additional code ..... One head (intake all)
(No regular rule of code)

1	11	1	L1	A
a		c		

a) Category codes and classification

Code	Category
1	Engine
2	Power drive
3	Fuel & Exhaust
4	Frame & Body
5	Steering
6	Electrical
7	Axle & Brake
8	Control system
9	-
0	Attachments

c) Operation codes and classification

Code	Operation category
1	Replace, Removal/Installation, Change
2	Overhaul
3	Adjust, Rotation
4	(Paint-related work: Top-coat)
5	Test, Inspect/diagnose, Measurment
6	(Overhaul-related work: Rebore)
7	(Overhaul-related work: Reseal)
8	(Resurface)
9	(Paint-related work: Refinish)
0	Repair, Cleaning, Air bleeding

Major service items without using spare parts
(1) Removal/Installation, (2) Adjustment,
(3) Inspection/Measurement, (4) Overhaul, (5) Other work

E: Engine, T: Transmission, D: Drive system,
B: Body and related parts

(1) Removal/Installation

Set with the parts configuration in the status of being removed from the product.

	LON	DESCRIPTION	FRT
E	1001A0	**ENGINE AND GENERATOR-REMOVAL/INSTALLATION**	1.1
	1111L3	**CYLINDER HEAD ASSEMBLY-REMOVAL/INSTALLATION**	1.4
	1111AB	**CYLINDER HEAD ASSEMBLY-REMOVAL/INSTALLATION(A)** NOTE: CL model	1.3
B	6221R4	**CONTROL BOX ASSEMBLY-REMOVAL/INSTALLATION**	0.5

(2) Adjustment

	LON	DESCRIPTION	FRT
E	1113A1	**VALVE CLEARANCE-ADJUSTMENT** NOTE: For 1 product	0.3
	3113A2	**CARBURETOR IDLE-ADJUSTMENT**	0.2

(3) Inspection, Measurement, Cleaning

	LON	DESCRIPTION	FRT
E	1105A0	**ENGINE OIL-INSPECTION**	0.1
	3115A2	**CARBURETOR FLOAT LEVEL-MEASUREMENT**	0.5
	3115A3	**CARBURETOR FLOAT LEVEL-MEASUREMENT(A)** NOTE: CL model	0.3
	3120A0	**AIR CLEANER-CLEANING** INCLUDES: Air cleaner-inspection	0.2
	3130A0	**SPARK ARRESTER-CLEANING** INCLUDES: Spark arrester-inspection	0.2
	6140A0	**SPARK PLUG-ADJUSTMENT/CLEANING** INCLUDES: Spark plug check NOTE: For 1 product	0.2

(4) Overhaul

Work condition: The required Measurements, inspections, adjustments, and cleaning/washing of each part are performed, including the main body removal/installation work and the replacement of defective parts.

	LON	DESCRIPTION	FRT
E	3112A0	**CARBURETOR-OVERHAUL** INCLUDES: All necessary adjustment	0.7
	3112A3	**CARBURETOR-OVERHAUL(A)** INCLUDES: All necessary adjustment NOTE: CL model	0.5

(5) Other work

	LON	DESCRIPTION	FRT
E	1101E1	**ENGINE OIL-CHANGE** INCLUDES: Engine oil-inspection	0.1

ENGINE GROUP

B14

2

E-2 D 1

CYLINDER HEAD

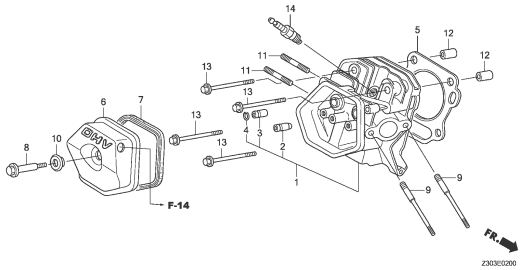

E-3 D 3

CYLINDER BARREL

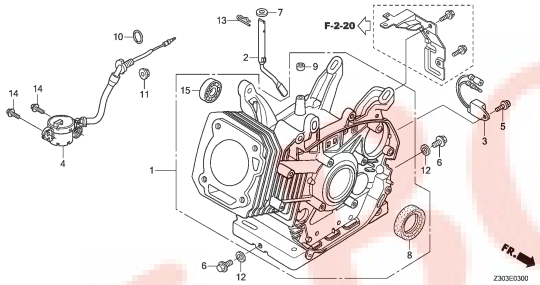

E-6 D 5

CRANKCASE COVER

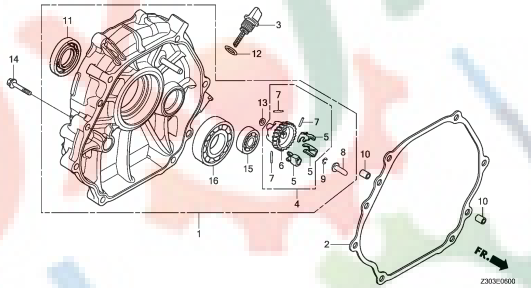

E-7 D 6

CRANKSHAFT

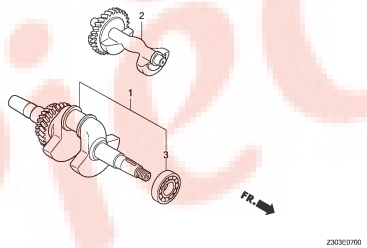

E-8 D 7

PISTON/CONNECTING ROD

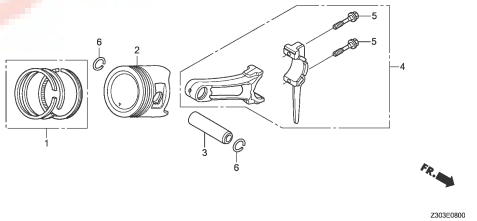

E-9 D 8

CAMSHAFT

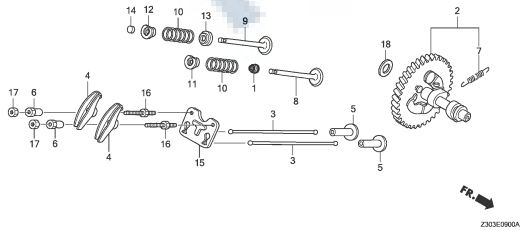

E-11 D12

RECOIL STARTER(1)

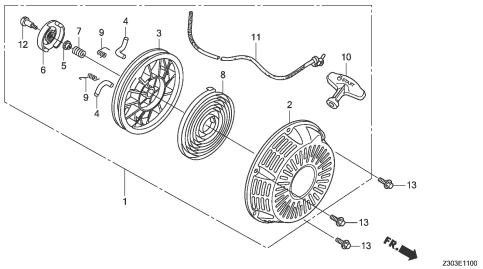

E-11-1 D13

RECOIL STARTER(2)

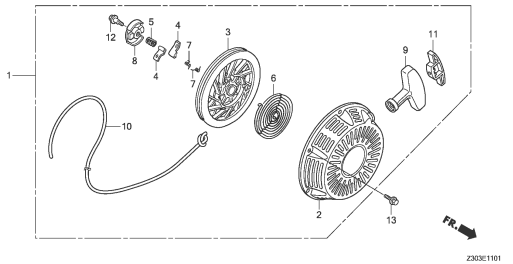

E-12 D14

FAN COVER

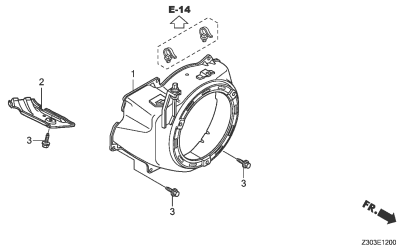

E-14 D15

CARBURETOR(1)

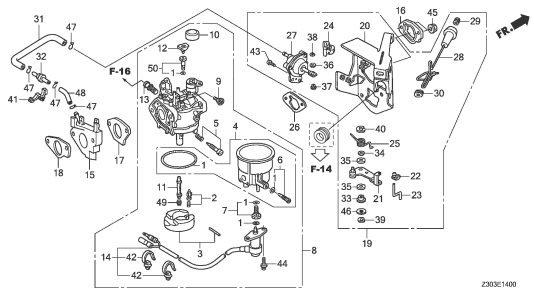

E-14-1 E 2

CARBURETOR(2)

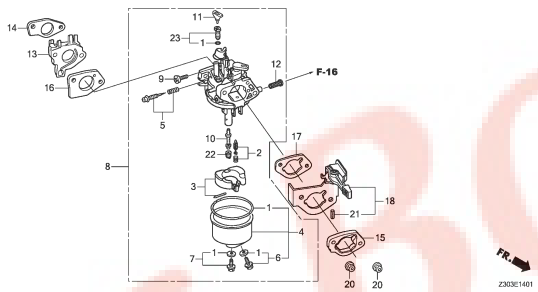

E-19 E 3

FLYWHEEL

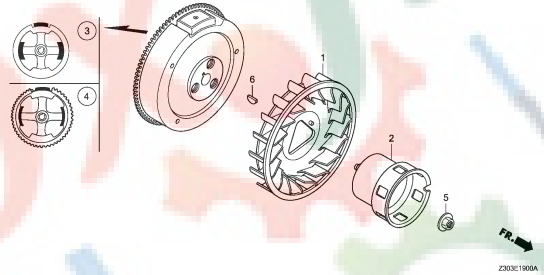

E-20 E 4

IGNITION COIL(1)

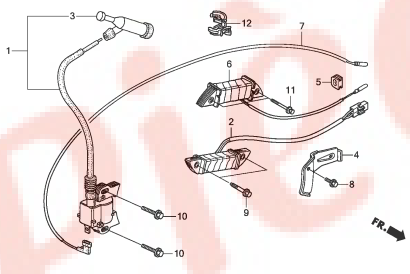

E-20-1 E 5

IGNITION COIL(2)

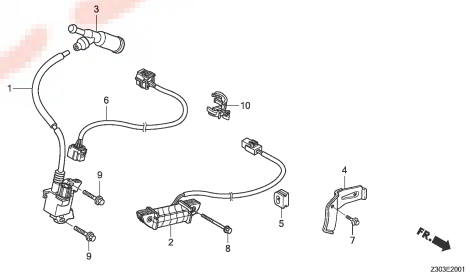

E-21 E 6

STARTER MOTOR

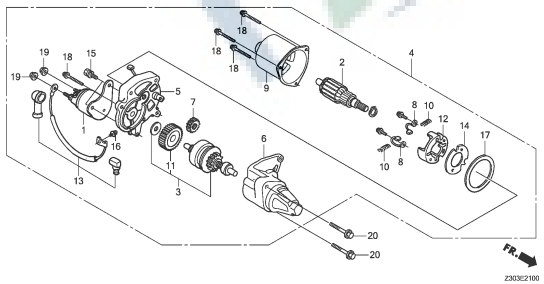

E-22 E 7

CONTROL

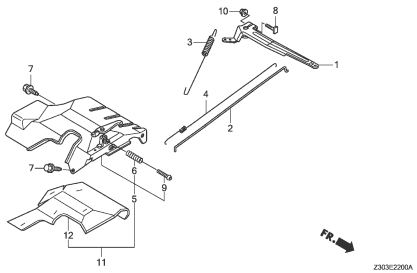

Pieces Book

F-2 F 1

CONTROL PANEL(1)

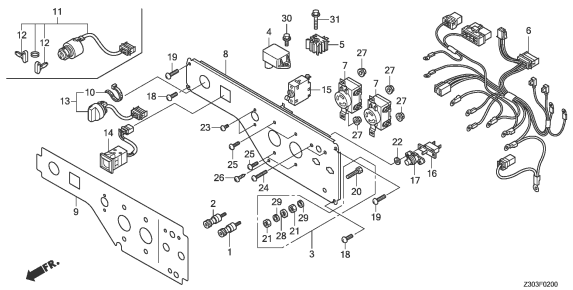

F-2-1 F 3

CONTROL PANEL(2)

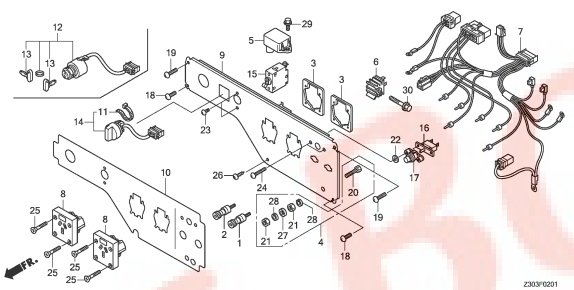

F-2-2 F 5

CONTROL PANEL(3)

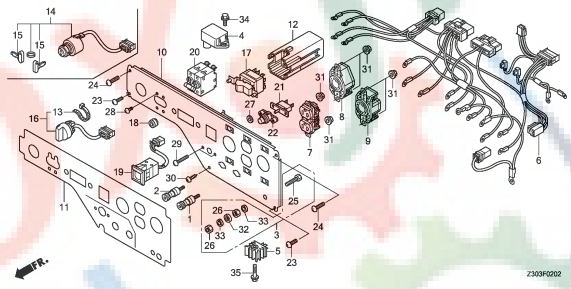

F-2-3 F 7

CONTROL PANEL(4)

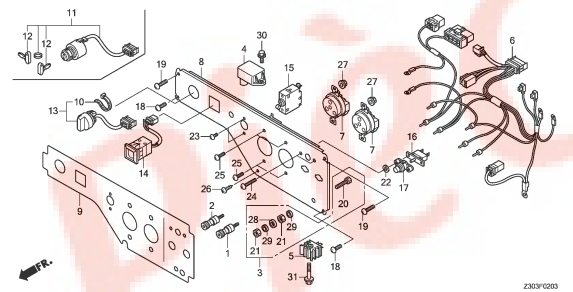

F-2-4 F 9

CONTROL PANEL(5)

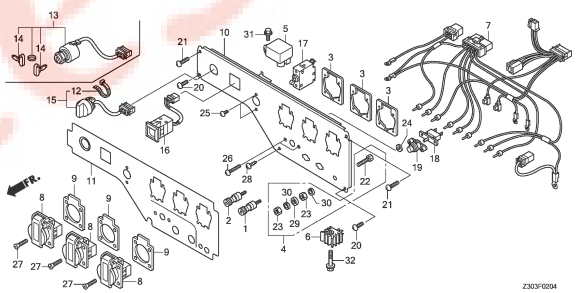

F-2-5 F11

CONTROL PANEL(6)

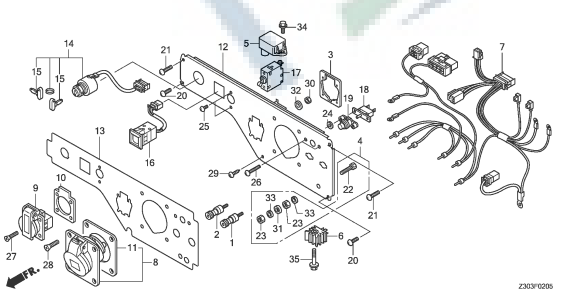

F-2-8 F13

CONTROL PANEL(7)

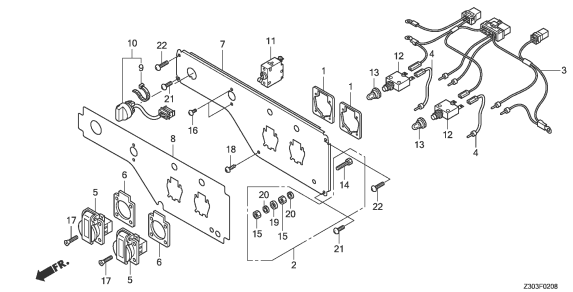

F-2-9 F14

CONTROL PANEL(8)

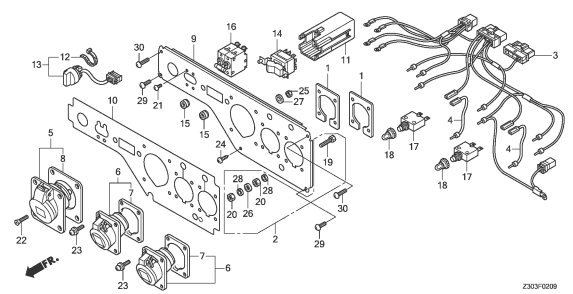

F-2-10 F16

CONTROL PANEL(9)

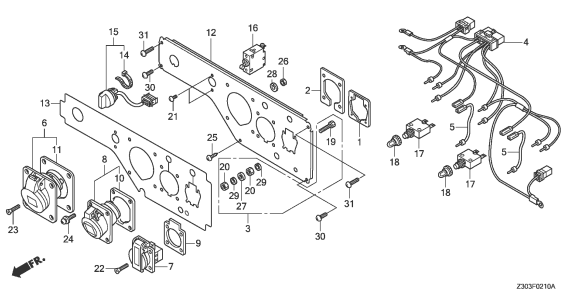

FRAME GROUP

C 1

F-2-11 G 2

CONTROL PANEL(10)

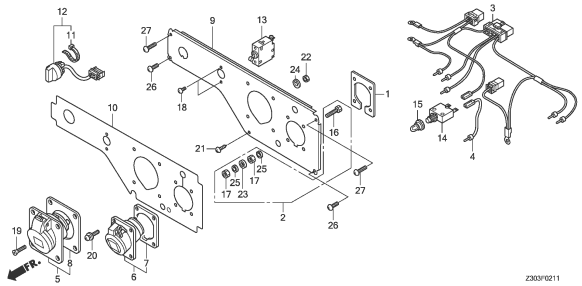

F-2-20 G 4

A.V.R. UNIT

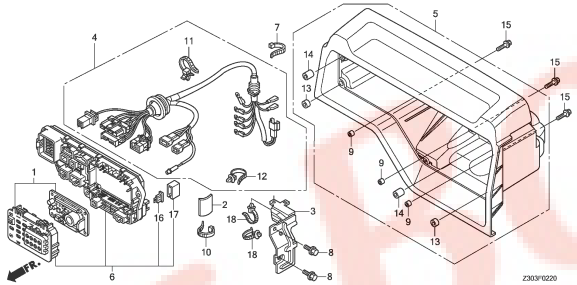

F-14 G 6

AIR CLEANER

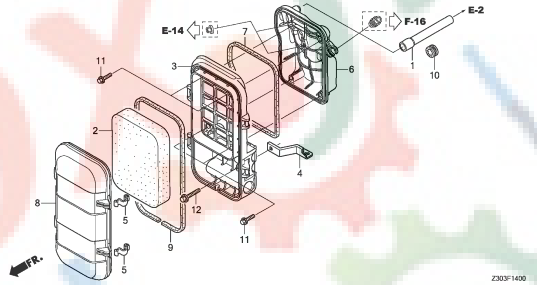

F-15 G 7

MUFFLER(1)

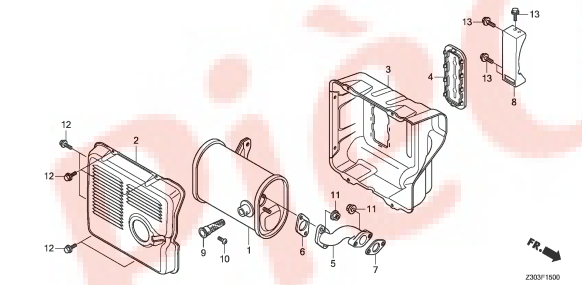

F-15-1 G 8

MUFFLER(2)

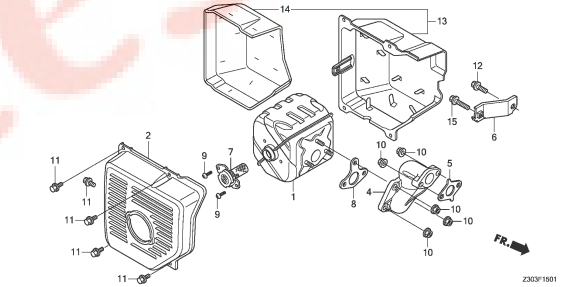

F-16 G 9

FUEL TANK

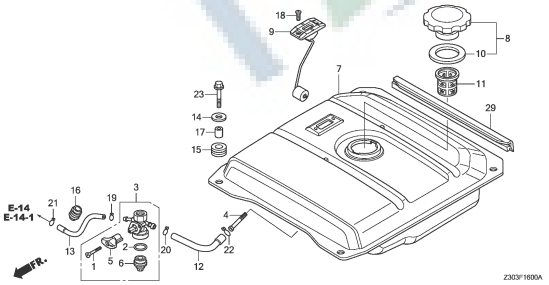

F-25 G10

FRAME

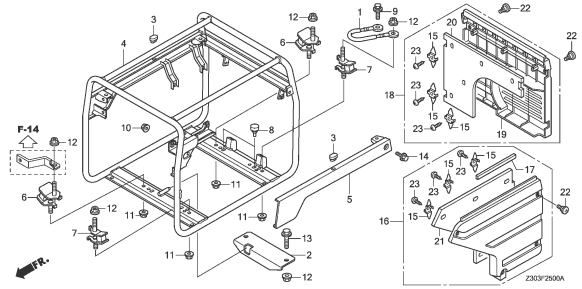

F-25-10 G12

BATTERY TRAY

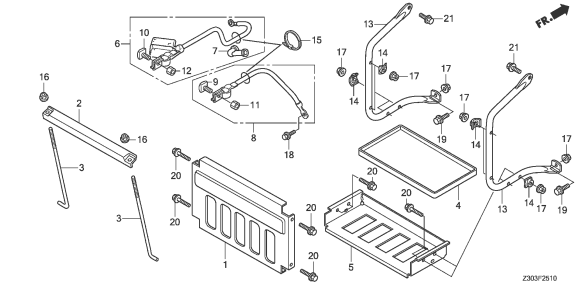

F-29 G13

ROTOR/STATOR

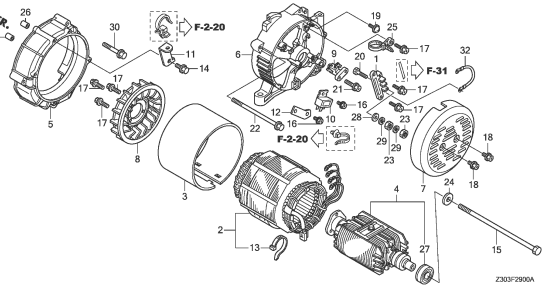

3

FRAME GROUP

C 2

F-31 G15

LABEL

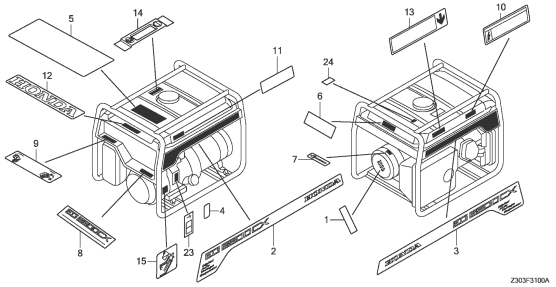

F-32 H 1

TOOL

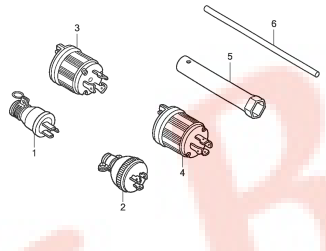

FOP-1 H 2

WHEEL KIT(4-WHEELS)

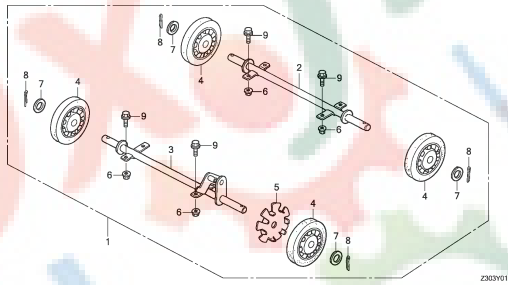

FOP-2 H 3

WHEEL KIT

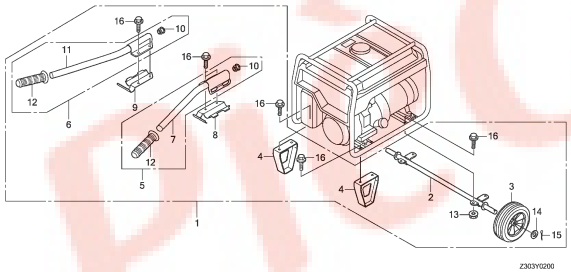

3

CYLINDER HEAD

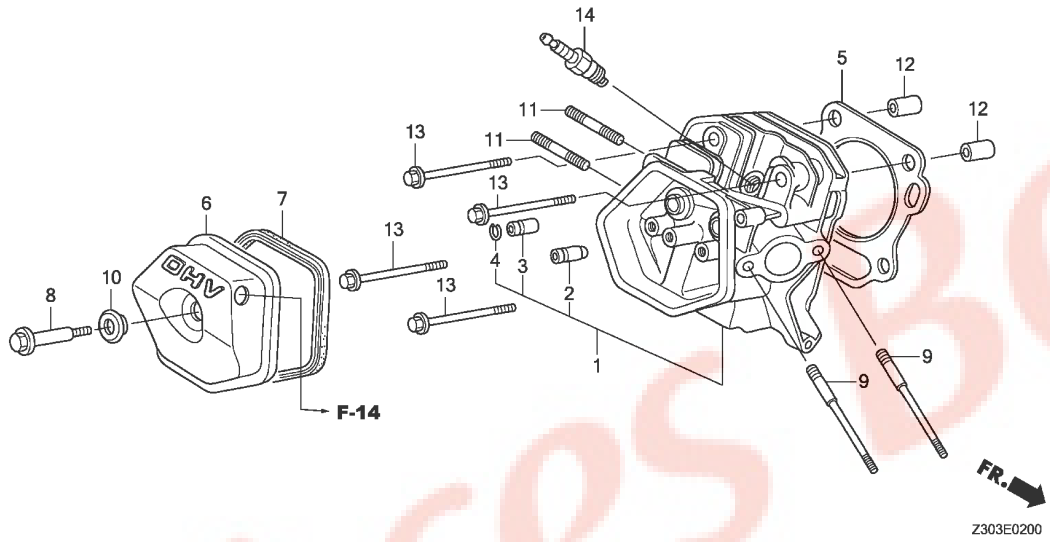

Ref. No.	L.O.N.	(Relative ref. Number) Description	F.R.T.
1	1111N3	HEAD, CYLINDER	2.2
		.INCLUDES: Valve clearance adjustment and reface	
	1111AZ	HEAD, CYLINDER(A)	2.1
		.INCLUDES: Valve clearance adjustment and reface	
		.NOTE: CL model	
2	1111E9	GUIDE, INTAKE VALVE	1.9
		.INCLUDES: Valve clearance adjustment	
	1111E9E	.Replace intake and exhaust all add	0.2
	1111BA	GUIDE, INTAKE VALVE(A)	1.8
		.INCLUDES: Valve clearance adjustment	
		.NOTE: CL model	
	1111BAA	.Replace intake and exhaust all add	0.2
3	1111E8	GUIDE, EXHAUST VALVE	1.9
		.INCLUDES: Valve clearance adjustment	
	1111E8E	.Replace intake and exhaust all add	0.2
+	1111BB	GUIDE, EXHAUST VALVE(A)	1.8

Ref. No.	Part No.	Description	Reqd. QTY EG 5500 CX	EG 6500 CX	EG 5500 CXS	EG 6500 CXS	EG 5500 CL	Serial No.	Parts catalogue code
1	12200-ZF6-406	HEAD COMP., CYLINDER	1	1	1	1	-		
	12210-Z5T-406	.....	-	-	-	-	1		
2	12204-ZE2-306	GUIDE, IN. VALVE(O.S.)	1	1	1	1	1		
3	12205-ZE2-305	GUIDE, EX. VALVE(O.S.)	1	1	1	1	1		
4	12216-ZE2-300	CLIP, VALVE GUIDE	1	1	1	1	1		
5	12251-ZF6-W01	GASKET, CYLINDER HEAD	1	1	1	1	-		
	12251-Z5T-003	GASKET, CYLINDER HEAD (NIPPON LEAKLESS)	-	-	-	-	1		
6	12310-ZE2-020	COVER COMP., HEAD	1	1	1	1	-		
	12310-Z5T-000	COVER, CYLINDER HEAD	-	-	-	-	1		
7	12391-ZE2-020	PACKING, HEAD COVER	1	1	1	1	1		
8	90014-ZE2-000	BOLT, HEAD COVER	1	1	1	1	-		
	90014-Z5T-000	.....	-	-	-	-	1		
9	90042-ZK6-D70	BOLT, STUD, 8X115	2	2	2	2	2		
10	90441-ZE2-010	WASHER COMP., HEAD COVER	1	1	1	1	1		
11	92900-08032-0E	BOLT, STUD, 8X32	2	2	2	2	2		
12	94301-12200	DOWEL PIN, 12X20	2	2	2	2	2		
13	95701-10080-00	BOLT, FLANGE, 10X80	4	4	4	4	4		
14	98079-55846	PLUG, SPARK(BPR5ES)(NGK)	1	1	1	1	-		
	98079-55876	.....	-	-	-	-	1		

CYLINDER HEAD

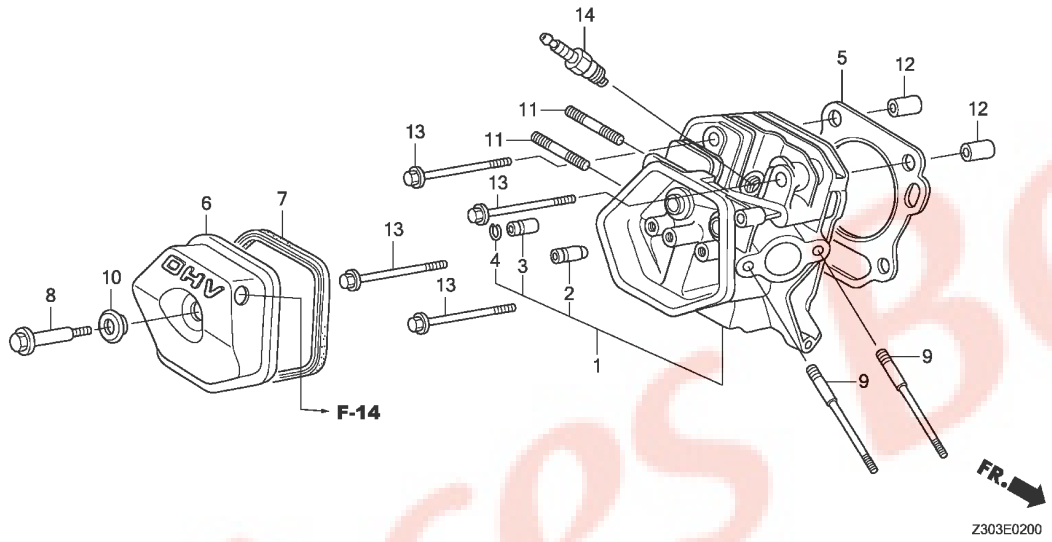

Ref. No.	L.O.N.	(Relative ref. Number) Description	F.R.T.
+ 3		.INCLUDES: Valve clearance adjustment	
		.NOTE: CL model	
	1111BBA	.Replace intake and exhaust all add ----------	0.2
5	1111N4	GASKET, CYLINDER HEAD --------	1.5
	1111BC	GASKET, CYLINDER HEAD(A) -----	1.4
		.NOTE: CL model	
6		(7)	
	1111D5	COVER, CYLINDER HEAD AND/OR PACKING, HEAD COVER ---------	0.1
14	6141C1	PLUG, SPARK ----------	0.1
		.INCLUDES: Spark plug check	

CYLINDER BARREL

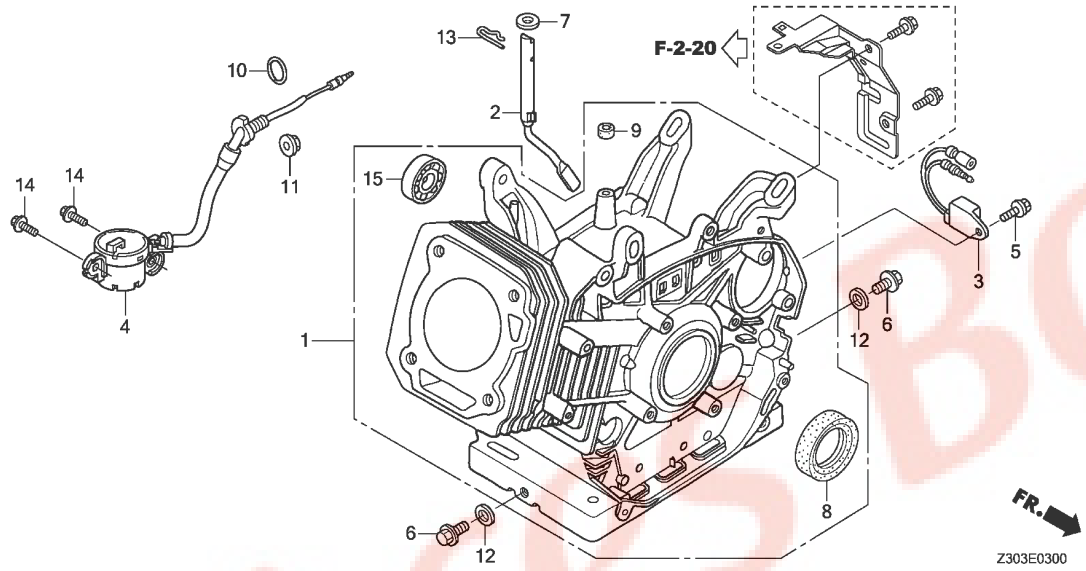

Ref. No.	L.O.N.	(Relative ref. Number) Description	F.R.T.
1	11O1AO	BARREL, CYLINDER ·····	3.1
		.INCLUDES: Engine removal and installation	
	11O1AOF	.With starter motor add ·····	0.1
2	1161B4	SHAFT, GOVERNOR ARM ·····	2.8
		.INCLUDES: Engine removal and installation	
	1161B4C	.With starter motor add ·····	0.1
3	6151AO	ALERT UNIT, ENGINE OIL ·····	0.1
4		(1O)	
	6151E8	SWITCH, OIL LEVEL ·····	1.9
		.INCLUDES: Engine removal and installation	
8	11O1E4	OIL SEAL, CRANKSHAFT :FRONT ··	2.9
		.INCLUDES: Engine removal and installation	
	11O1E4B	.With starter motor add ·····	0.1
9	11O1C4	OIL SEAL, GOVERNOR ARM SHAFT ·	2.8
		.INCLUDES: Engine removal and installation	
	11O1C4A	.With starter motor add ·····	0.1
15	11O1F4	BEARING, BALANCER WEIGHT :FRONT ·····	2.9
+		.INCLUDES: Engine removal and installation	

Ref. No.	Part No.	Description	Reqd. QTY EG 5500 CX	EG 6500 CX	EG 5500 CXS	EG 6500 CXS	EG 5500 CL	Serial No.	Parts catalogue code
1	12000-Z7E-406	BARREL ASSY., CYLINDER(ALERT)	1	1	-	-	-		
	12000-Z7E-407	BARREL ASSY., CYLINDER (SELFSTARTER+ALERT)	-	-	1	1	-		
	12000-Z5T-407	BARREL ASSY., CYLINDER(ALERT)	-	-	-	-	1		
2	16541-Z7E-000	SHAFT, GOVERNOR ARM ·····	1	1	1	1	-		
	16541-ZE3-010	·····	-	-	-	-	1		
3	34150-ZH7-013	ALERT UNIT, OIL ·····	1	1	1	1	-		
4	35480-Z7E-003	SWITCH ASSY., OIL LEVEL ·····	1	1	1	1	-		
	35480-ZF6-003	·····	-	-	-	-	1		
5	90013-883-000	BOLT, FLANGE, 6X12(CT200) ···	1	1	1	1	-		
6	90131-883-000	BOLT, DRAIN PLUG, 12X15 ·····	2	2	2	2	2		
7	90446-Z7E-000	WASHER, 8.2X17X0.8 ·····	1	1	1	1	-		
	90446-KE1-000	·····	-	-	-	-	1		
8	91201-Z7E-003	OIL SEAL, 35X52X8 ·····	1	1	1	1	-		
	91201-Z1C-003	·····	-	-	-	-	1		
9	91203-Z7E-003	OIL SEAL, 8X14X5 ·····	1	1	1	1	-		
	91203-952-771	·····	-	-	-	-	1		
10	91353-Z7E-003	O-RING, 14MM ·····	1	1	1	1	-		
	91353-671-004	O-RING, 14MM(NOK) ·····	-	-	-	-	1		
11	94050-10000	NUT, FLANGE, 10MM ·····	1	1	1	1	1		
12	94109-12000	WASHER, DRAIN PLUG, 12MM ····	2	2	2	2	2		
13	94251-10000	PIN, LOCK, 10MM ·····	1	1	1	1	1		
14	95701-06012-00	BOLT, FLANGE, 6X12 ·····	2	2	2	2	2		
15	96100-62020-00	BEARING, RADIAL BALL, 6202 ··	1	1	1	1	1		

CYLINDER BARREL

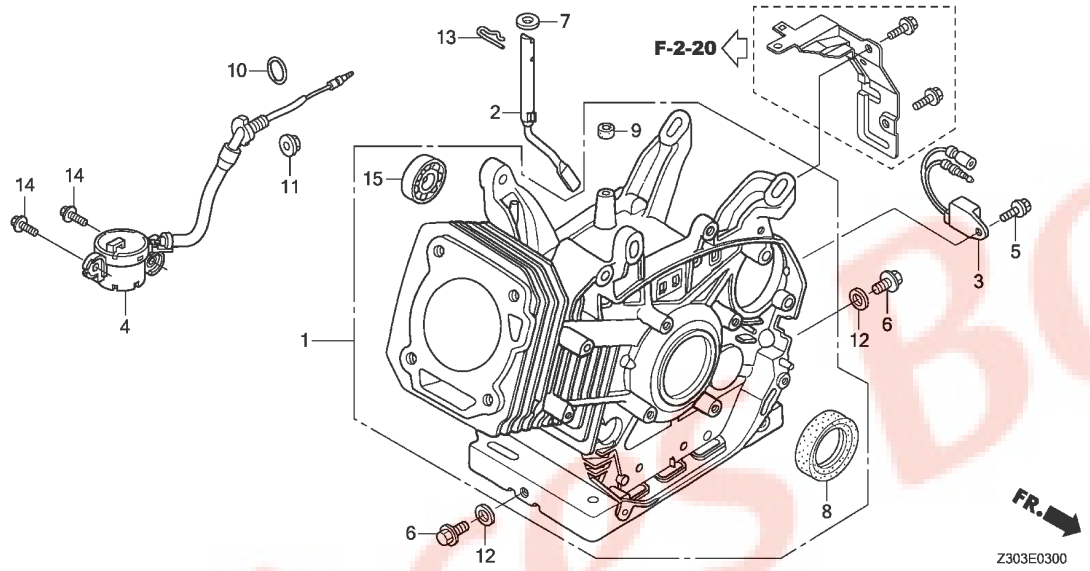

Ref. No.	L.O.N.	(Relative ref. Number) Description	F.R.T.
+15	1101F4B	.With starter motor add ·····	0.1

CRANKCASE COVER

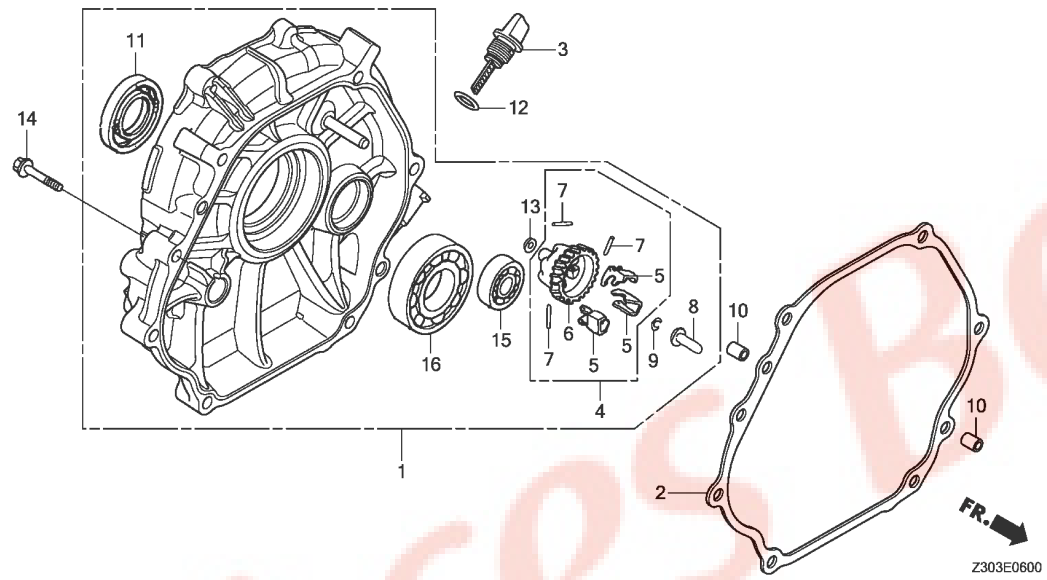

Ref. No.	L.O.N.	(Relative ref. Number) Description	F.R.T.
1	11O1F1	COVER, CRANKCASE ·····	1.7
		.INCLUDES: Engine removal and installation	
2	11O1E9	PACKING, CRANKCASE COVER ·····	1.7
		.INCLUDES: Engine removal and installation	
4	1161C4	GOVERNOR ASSEMBLY ·····	1.7
		.INCLUDES: Engine removal and installation	
6		(5,7)	
	1161A7	HOLDER, GOVERNOR WEIGHT ·····	1.8
		.INCLUDES: Engine removal and installation	
8	1161B6	SLIDER, GOVERNOR ·····	1.7
		.INCLUDES: Engine removal and installation	
11	11O1E5	OIL SEAL, CRANKSHAFT :REAR ···	1.8
		.INCLUDES: Engine removal and installation	
15	11O1F5	BEARING, BALANCER WEIGHT :REAR	1.8
		.INCLUDES: Engine removal and installation	
16	11O1A6	BEARING, CRANKSHAFT :REAR ····	1.8
		.INCLUDES: Engine removal and installation	

Ref. No.	Part No.	Description	Reqd. QTY EG 5500 CX	EG 6500 CX	EG 5500 CXS	EG 6500 CXS	EG 5500 CL	Serial No.	Parts catalogue code
1	11300-Z7E-E60	COVER ASSY., CRANKCASE ·····	1	1	1	1	-		
	11300-Z1C-E20	COVER ASSY., CRANKCASE(E-TYPE)	-	-	-	-	1		
2	11381-ZE3-801	PACKING, CASE COVER ·····	1	1	1	1	-		
	11381-Z5T-000	·····	-	-	-	-	1		
3	15620-Z7E-800	CAP, OIL FILLER ·····	1	1	1	1	-		
	15620-ZE2-700	·····	-	-	-	-	1		
4	16510-Z7E-000	GOVERNOR ASSY. ·····	1	1	1	1	-		
	16510-ZE3-000	·····	-	-	-	-	1		
5	16511-ZE8-000	WEIGHT, GOVERNOR ·····	3	3	3	3	3		
6	16512-Z7E-000	HOLDER, GOVERNOR WEIGHT ·····	1	1	1	1	-		
	16512-ZE3-000	·····	-	-	-	-	1		
7	16513-ZE2-000	PIN, GOVERNOR WEIGHT ·····	3	3	3	3	3		
8	16531-Z0A-000	SLIDER, GOVERNOR ·····	1	1	1	1	1		
9	90602-ZE1-000	CLIP, GOVERNOR HOLDER ·····	1	1	1	1	1		
10	90701-Z7E-000	DOWEL PIN, 8X12 ·····	2	2	2	2	-		
	90701-HC4-000	·····	-	-	-	-	2		
11	91201-Z7E-003	OIL SEAL, 35X52X8 ·····	1	1	1	1	-		
	91201-Z1C-003	·····	-	-	-	-	1		
12	91301-805-000	O-RING, 26X2.7 ·····	1	1	1	1	1		
13	94101-06800	WASHER, PLAIN, 6MM ·····	1	1	1	1	1		
14	95701-08040-00	BOLT, FLANGE, 8X40 ·····	7	7	7	7	7		
15	96100-62020-00	BEARING, RADIAL BALL, 6202 ··	1	1	1	1	1		
16	96100-62070-00	BEARING, RADIAL BALL, 6207 ··	1	1	1	1	1		

CRANKSHAFT

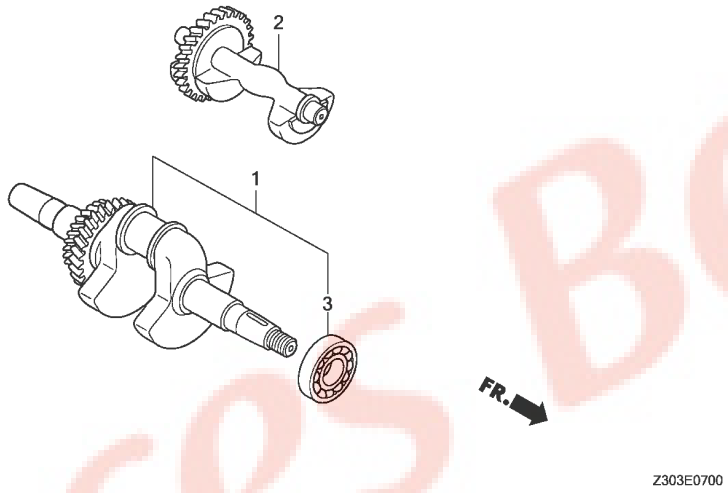

Ref. No.	L.O.N.	(Relative ref. Number) Description	F.R.T.
1	1101F0	CRANKSHAFT	2.8
		.INCLUDES: Engine removal and installation	
	1101F0G	.With starter motor add	0.1
2	1101D8	WEIGHT, BALANCER	1.8
		.INCLUDES: Engine removal and installation	
3	1101A4	BEARING, CRANKSHAFT :FRONT ...	3.0
		.INCLUDES: Engine removal and installation	
	1101A4B	.With starter motor add	0.1

Ref. No.	Part No.	Description	Reqd. QTY EG 5500 CX	EG 6500 CX	EG 5500 CXS	EG 6500 CXS	EG 5500 CL	Serial No.	Parts catalogue code
1	13310-Z7E-700	CRANKSHAFT COMP.	1	1	1	1	-		
	13310-ZK6-D41	.....	-	-	-	-	1		
2	13351-Z7E-000	WEIGHT, BALANCER	1	1	1	1	-		
	13351-ZE3-010	.....	-	-	-	-	1		
3	91001-ZF6-013	BEARING, RADIAL BALL, 6207SH	1	1	1	1	1		

PISTON/CONNECTING ROD

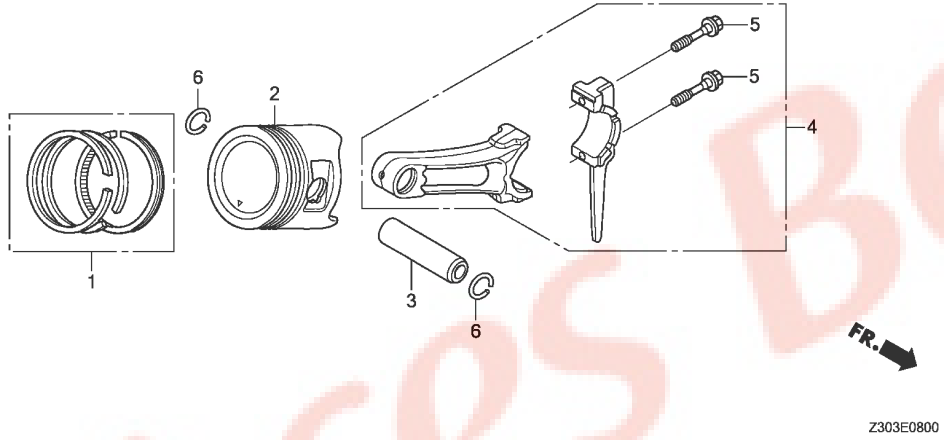

Ref. No.	L.O.N.	(Relative ref. Number) Description	F.R.T.
2		(1,3,4)	
	1111R1	PISTON AND/OR RING SET AND/OR BEARING AND/OR ROD ·····	2.9
		.INCLUDES: Engine removal and installation	
		.INCLUDES: Inspection/ Measurement/Cleaning	
	1111R1K	.With starter motor add ·····	0.1

Ref. No.	Part No.	Description	Reqd. QTY EG 5500 CX	EG 6500 CX	EG 5500 CXS	EG 6500 CXS	EG 5500 CL	Serial No.	Parts catalogue code
1	13010-Z5R-004	RING SET, PISTON(STD.) (TEIKOKU)	1	1	1	1	1		
	13010-Z5T-003	RING SET, PISTON(STD.)(RIKEN)	1	1	1	1	1		
	13011-Z5R-004	RING SET, PISTON(0.25) (TEIKOKU)	(1)	(1)	(1)	(1)	(1)		
	13011-Z5T-003	RING SET, PISTON(0.25)(RIKEN)	(1)	(1)	(1)	(1)	(1)		
	13012-Z5R-004	RING SET, PISTON(0.50) (TEIKOKU)	(1)	(1)	(1)	(1)	(1)		
	13012-Z5T-003	RING SET, PISTON(0.50)(RIKEN)	(1)	(1)	(1)	(1)	(1)		
	13013-Z5R-004	RING SET, PISTON(0.75) (TEIKOKU)	(1)	(1)	(1)	(1)	(1)		
	13013-Z5T-003	RING SET, PISTON(0.75)(RIKEN)	(1)	(1)	(1)	(1)	(1)		
2	13101-Z7E-800	PISTON(STD.) ·····	1	1	1	1	-		
	13102-Z7E-800	PISTON(0.25) ·····	(1)	(1)	(1)	(1)	-		
	13103-Z7E-800	PISTON(0.50) ·····	(1)	(1)	(1)	(1)	-		
	13104-Z7E-800	PISTON(0.75) ·····	(1)	(1)	(1)	(1)	-		
	13101-Z5T-800	PISTON(STD.) ·····	-	-	-	-	1		
	13102-Z5T-800	PISTON(0.25) ·····	-	-	-	-	(1)		
	13103-Z5T-800	PISTON(0.50) ·····	-	-	-	-	(1)		
	13104-Z5T-800	PISTON(0.75) ·····	-	-	-	-	(1)		
3	13111-Z7E-000	PIN, PISTON ·····	1	1	1	1	-		
	13111-Z5T-000	·····	-	-	-	-	1		
4	13200-Z1C-000	ROD ASSY., CONNECTING(STD.) ·	1	1	1	1	1		
	13200-ZE3-315	ROD ASSY., CONNECTING (0.25 UNDER SIZE)	(1)	(1)	(1)	(1)	-		
	13200-Z1C-305	·····	-	-	-	-	(1)		
5	90001-ZE8-000	BOLT, CONNECTING ROD ·····	2	2	2	2	2		
6	90601-ZE3-000	CLIP, PISTON PIN, 20MM ·····	2	2	2	2	2		

CAMSHAFT

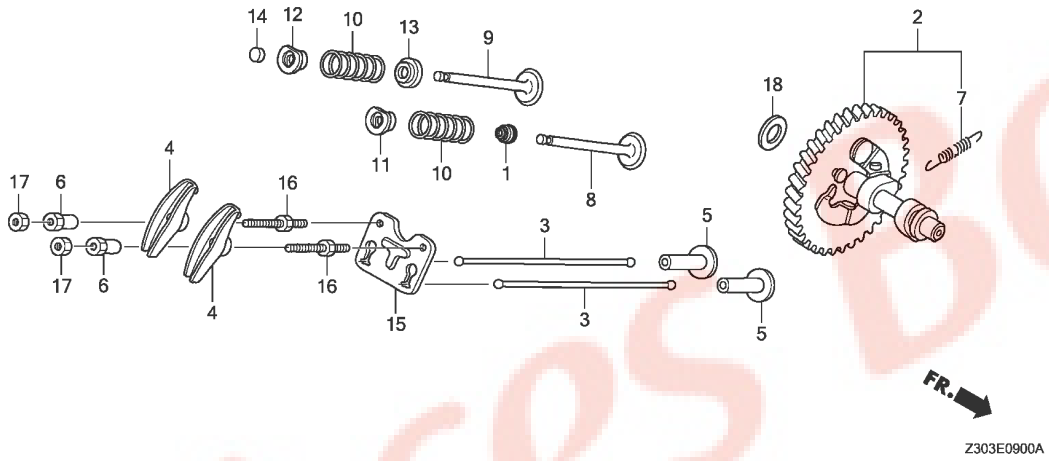

Ref. No.	L.O.N.	(Relative ref. Number) Description	F.R.T.
1	1111K2	SEAL, INTAKE VALVE STEM ------	1.5
		.INCLUDES: Valve clearance adjustment	
	1111BH	SEAL, INTAKE VALVE STEM(A) ---	1.4
		.INCLUDES: Valve clearance adjustment	
		.NOTE: CL model	
2	1111C2	CAMSHAFT ----------	2.0
		.INCLUDES: Engine removal and installation	
		.INCLUDES: Valve clearance adjustment	
3	1111L6	ROD, PUSH :INTAKE ----------	0.2
		.INCLUDES: Valve clearance adjustment	
	1111L6A	.Replace exhaust push rod add	0.1
	1111L7	ROD, PUSH :EXHAUST ----------	0.2
		.INCLUDES: Valve clearance adjustment	
	1111L7A	.Replace intake push rod add -	0.1
4	1111A2	ARM, ROCKER :INTAKE ---------	0.2
		.INCLUDES: Valve clearance adjustment	
	1111A2A	.Replace exhaust rocker arm add ----------	0.1
+			

Ref. No.	Part No.	Description	Reqd. QTY EG 5500 CX	EG 6500 CX	EG 5500 CXS	EG 6500 CXS	EG 5500 CL	Serial No.	Parts catalogue code
1	12209-Z7E-003	SEAL, VALVE STEM ----------	1	1	1	1	-		
	12209-ZE8-003	----------	-	-	-	-	1		
2	14100-ZF6-W01	CAMSHAFT ASSY. ----------	1	1	1	1	-		
	14100-Z5T-820	----------	-	-	-	-	1		
3	14410-Z7E-000	ROD, PUSH ----------	2	2	2	2	-		
	14410-ZK6-880	ROD COMP., PUSH ----------	-	-	-	-	2		
4	14431-ZE2-010	ARM, VALVE ROCKER ----------	2	2	2	2	2		
5	14441-Z7E-000	LIFTER, VALVE ----------	2	2	2	2	-		
	14441-ZE2-000	----------	-	-	-	-	2		
6	14451-Z7E-000	PIVOT, ROCKER ARM ----------	2	2	2	2	-		
	14451-ZE1-013	----------	-	-	-	-	2		
7	14568-ZE1-000	SPRING, WEIGHT RETURN -------	1	1	1	1	1		
8	14711-Z7E-000	VALVE, IN. ----------	1	1	1	1	-		
	14711-Z5T-000	----------	-	-	-	-	1		
9	14721-Z7E-800	VALVE, EX.(STELLITE) --------	1	1	1	1	-		
	14721-Z5T-000	VALVE, EX. ----------	-	-	-	-	1		
10	14751-Z7E-000	SPRING, VALVE ----------	2	2	2	2	-		
	14751-Z1C-000	----------	-	-	-	-	2		
11	14771-ZE2-000	RETAINER, IN. VALVE SPRING --	1	1	1	1	-		
	14771-Z8S-000	----------	-	-	-	-	1		
12	14773-ZE2-000	RETAINER, EX. VALVE SPRING --	1	1	1	1	-		
	14771-Z8S-000	RETAINER, IN. VALVE SPRING -- (EXHAUST SIDE)	-	-	-	-	1		
13	14775-ZE2-010	SEAT, VALVE SPRING ----------	1	1	1	1	1		
14	14781-Z7E-000	ROTATOR, VALVE ----------	1	1	1	1	-		
15	14791-Z7E-000	GUIDE, PUSH ROD ----------	1	1	1	1	-		
	14791-ZK6-880	----------	-	-	-	-	1		

CAMSHAFT

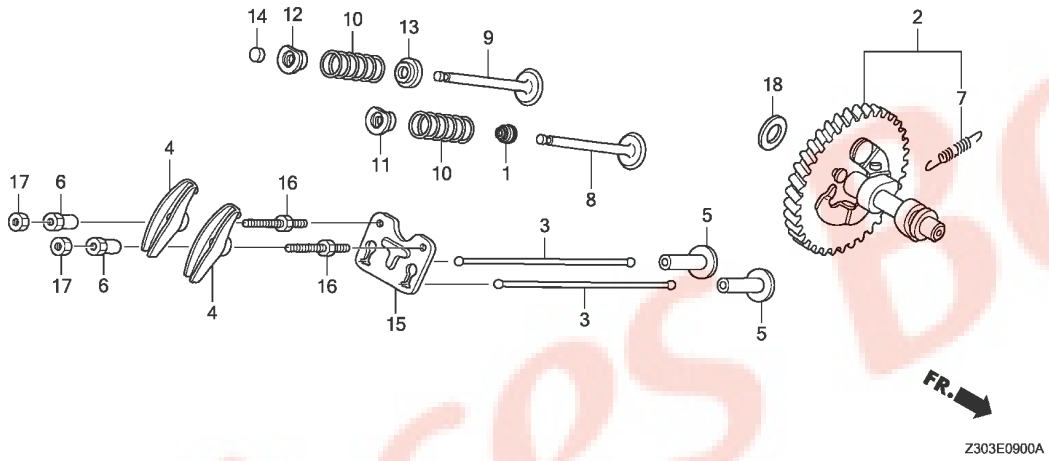

Ref. No.	L.O.N.	(Relative ref. Number) Description	F.R.T.
+ 4	1111A1	ARM, ROCKER :EXHAUST	0.2
		.INCLUDES: Valve clearance adjustment	
	1111A1A	.Replace intake rocker arm add	0.1
5	1111L9	LIFTER, VALVE :INTAKE	2.0
		.INCLUDES: Engine removal and installation	
		.INCLUDES: Valve clearance adjustment	
		.NOTE: Same time for two units	
	1111M0	LIFTER, VALVE :EXHAUST	2.0
		.INCLUDES: Engine removal and installation	
		.INCLUDES: Valve clearance adjustment	
		.NOTE: Same time for two units	
8	1111L1	VALVE, INTAKE	1.6
		.INCLUDES: Valve clearance adjustment and reface	
	1111L1E	.Replace intake and exhaust all add	0.2
	1111BD	VALVE, INTAKE(A)	1.5
		.INCLUDES: Valve clearance adjustment and reface	
+		.NOTE: CL model	

Ref. No.	Part No.	Description	Reqd. QTY EG 5500 CX	EG 6500 CX	EG 5500 CXS	EG 6500 CXS	EG 5500 CL	Serial No.	Parts catalogue code
16	90012-ZE0-010	BOLT, PIVOT, 8MM	2	2	2	2	2		
17	90206-ZE1-000	NUT, PIVOT ADJUSTING	2	2	2	2	2		
18	90413-ZK6-880	WASHER, THRUST, 16.1MM	-	-	-	-	1		

CAMSHAFT

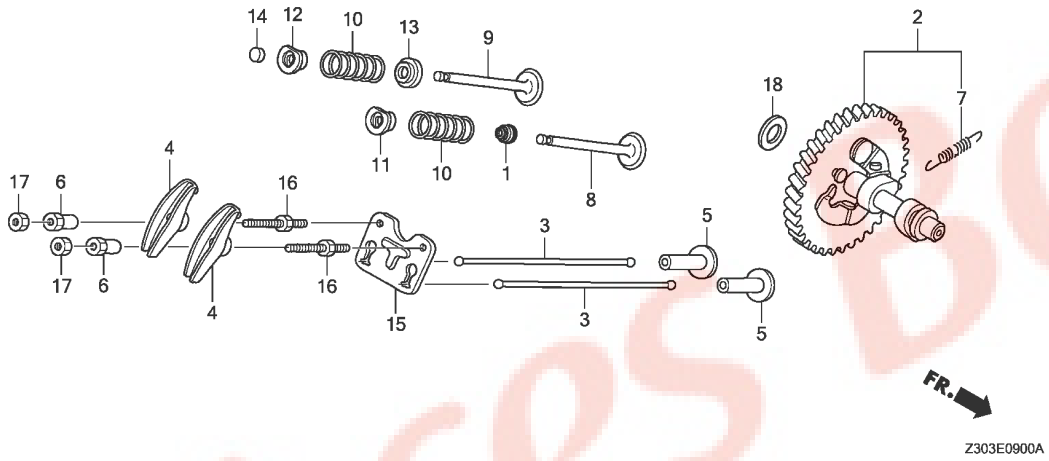

Ref. No.	L.O.N.	(Relative ref. Number) Description	F.R.T.
+ 8	1111BDA	.Replace intake and exhaust all add ----------	0.2
9	1111LO	VALVE, EXHAUST ----------	1.6
		.INCLUDES: Valve clearance adjustment and reface	
	1111LOE	.Replace intake and exhaust all add ----------	0.2
	1111BE	VALVE, EXHAUST(A) ----------	1.5
		.INCLUDES: Valve clearance adjustment and reface	
		.NOTE: CL model	
	1111BEA	.Replace intake and exhaust all add ----------	0.2
10	1111P3	SPRING, VALVE :INTAKE --------	1.5
		.INCLUDES: Valve clearance adjustment	
	1111P3A	.Replace intake and exhaust all add ----------	0.1
	1111P4	SPRING, VALVE :EXHAUST --------	1.5
		.INCLUDES: Valve clearance adjustment	
	1111P4A	.Replace intake and exhaust all add ----------	0.1
+	1111BF	SPRING, VALVE(A) :INTAKE -----	1.4

Pièces Bo

CAMSHAFT

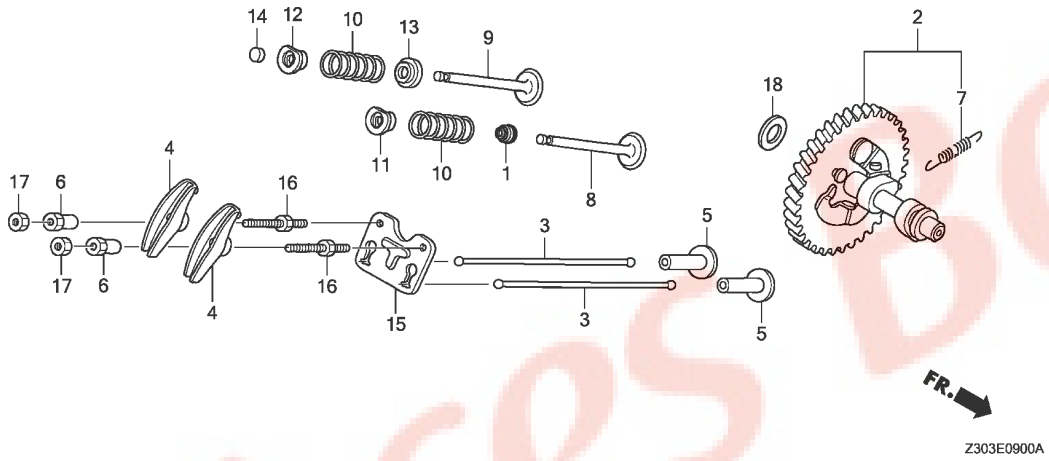

Ref. No.	L.O.N.	(Relative ref. Number) Description	F.R.T.
+10		.INCLUDES: Valve clearance adjustment	
		.NOTE: CL model	
	1111BFA	.Replace intake and exhaust all add ----------	0.1
	1111BG	SPRING, VALVE(A) :EXHAUST ----	1.4
		.INCLUDES: Valve clearance adjustment	
		.NOTE: CL model	
	1111BGA	.Replace intake and exhaust all add ----------	0.1
14	1111J7	ROTATOR, VALVE ----------	0.2
		.INCLUDES: Valve clearance adjustment	

RECOIL STARTER(1)

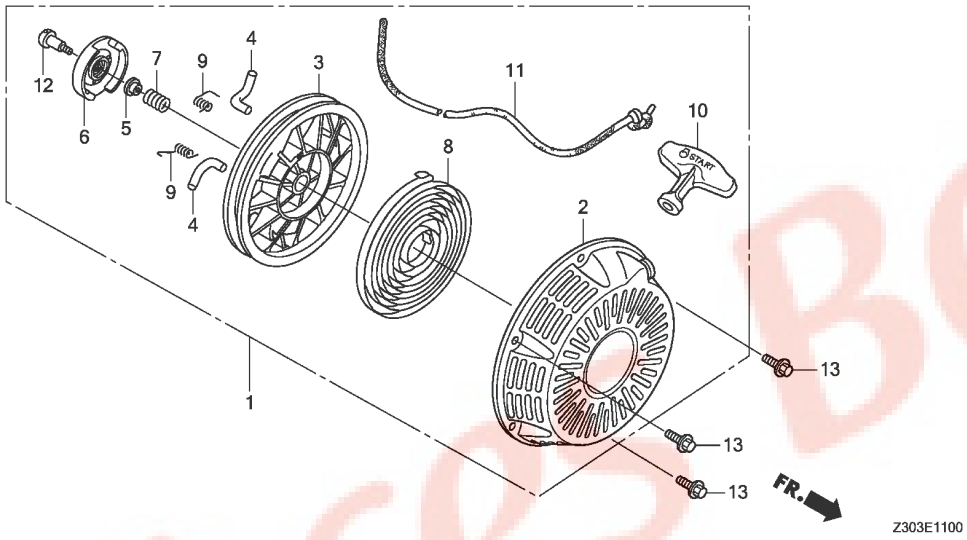

Ref. No.	L.O.N.	(Relative ref. Number) Description	F.R.T.
1	1121B9	STARTER, RECOIL ----------	0.1
3	1121B1	REEL, RECOIL STARTER ---------	0.3
4		(9)	
	1121B0	RATCHET, STARTER AND/OR SPRING, RATCHET ----------	0.2
6		(7)	
	1121A4	GUIDE, RATCHET ----------	0.2
8	1121B7	SPRING, RECOIL STARTER RETURN	0.3
10	1121A3	GRIP, RECOIL STARTER ---------	0.1
11	1121B3	ROPE, RECOIL STARTER ---------	0.3

Ref. No.	Part No.	Description	Reqd. QTY EG 5500 CX	EG 6500 CX	EG 5500 CXS	EG 6500 CXS	EG 5500 CL	Serial No.	Parts catalogue code
1	28400-Z7E-E61ZA	STARTER ASSY., RECOIL *NH1*.....BLACK	1	1	1	1	-		
2	28410-Z7E-003ZA	CASE COMP., RECOIL STARTER *NH1*.....BLACK	1	1	1	1	-		
3	28420-Z7E-003	REEL, RECOIL STARTER --------	1	1	1	1	-		
4	28422-ZH8-801	RATCHET, STARTER ----------	2	2	2	2	-		
5	28431-ZH8-801	PLATE, FRICTION ----------	1	1	1	1	-		
6	28433-Z2E-003	GUIDE, RATCHET ----------	1	1	1	1	-		
7	28441-Z2E-003	SPRING, FRICTION ----------	1	1	1	1	-		
8	28442-Z7E-003	SPRING, RECOIL STARTER ------	1	1	1	1	-		
9	28443-ZH8-801	SPRING, RETURN ----------	2	2	2	2	-		
10	28461-Z2E-003	GRIP, STARTER ----------	1	1	1	1	-		
11	28462-Z7E-E61	ROPE, RECOIL STARTER --------	1	1	1	1	-		
12	90003-ZH8-801	SCREW, SETTING ----------	1	1	1	1	-		
13	90008-Z1T-000	BOLT, FLANGE, 6X10 ----------	3	3	3	3	-		

RECOIL STARTER(2)

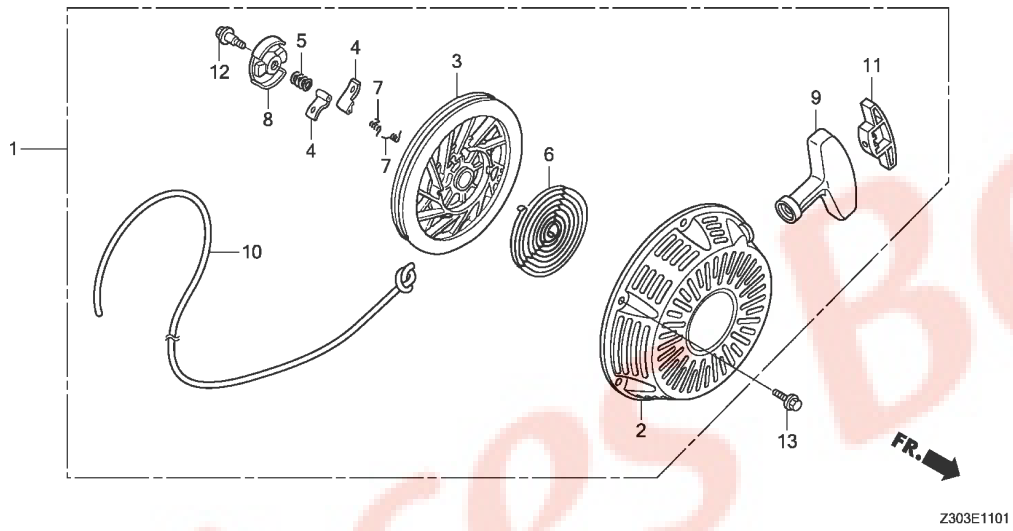

Ref. No.	L.O.N.	(Relative ref. Number) Description	F.R.T.
1	1121B9	STARTER, RECOIL ----------	0.1
3	1121B1	REEL, RECOIL STARTER ---------	0.3
4		(7)	
	1121B0	RATCHET, STARTER AND/OR SPRING, RATCHET ----------	0.2
6	1121B7	SPRING, RECOIL STARTER RETURN	0.3
8		(5)	
	1121B2	RETAINER, SPRING ----------	0.2
9	1121A3	GRIP, RECOIL STARTER ---------	0.1
10	1121B3	ROPE, RECOIL STARTER ---------	0.3

Ref. No.	Part No.	Description	Reqd. QTY EG 5500 CX	EG 6500 CX	EG 5500 CXS	EG 6500 CXS	EG 5500 CL	Serial No.	Parts catalogue code
1	28400-Z1C-E21ZA	STARTER ASSY., RECOIL *NH1*.....BLACK	-	-	-	-	1		
2	28410-ZE3-W01ZB	CASE COMP., RECOIL STARTER *NH1*.....BLACK	-	-	-	-	1		
3	28421-ZE3-W01	PULLEY, RECOIL STARTER ------	-	-	-	-	1		
4	28422-ZE2-W01	RATCHET, STARTER ----------	-	-	-	-	2		
5	28441-ZE2-W01	SPRING, FRICTION ----------	-	-	-	-	1		
6	28442-ZE2-W01	SPRING, STARTER RETURN ------	-	-	-	-	1		
7	28443-ZE2-W01	SPRING, RATCHET ----------	-	-	-	-	2		
8	28444-ZE2-W01	RETAINER, SPRING ----------	-	-	-	-	1		
9	28461-Z5T-003	GRIP, STARTER ----------	-	-	-	-	1		
10	28462-Z1C-801	ROPE, RECOIL STARTER --------	-	-	-	-	1		
11	28463-Z5T-003	GRIP, REINFORCEMENT ---------	-	-	-	-	1		
12	90004-ZE2-W01	SCREW, CENTER ----------	-	-	-	-	1		
13	90008-ZE2-003	BOLT, FLANGE, 6X10 ----------	-	-	-	-	3		

E-12 FAN COVER

D14

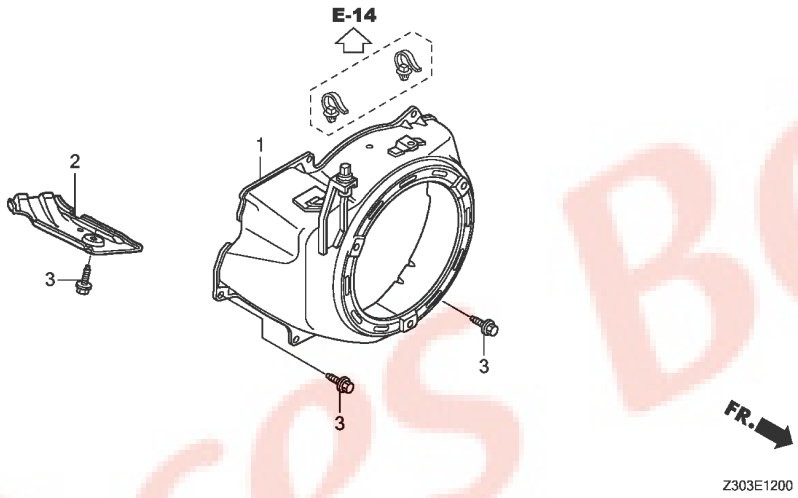

Ref. No.	L.O.N.	(Relative ref. Number) Description	F.R.T.
1	1141G8	COVER, ENGINE COOLING FAN	0.3

Ref. No.	Part No.	Description	Reqd. QTY EG 5500 CX	EG 6500 CX	EG 5500 CXS	EG 6500 CXS	EG 5500 CL	Serial No.	Parts catalogue code
1	19610-Z7E-E60ZA	COVER COMP., FAN *NH1*.....BLACK	1	1	1	1	-		
	19610-Z1C-E20ZA	*NH1*.....BLACK	-	-	-	-	1		
2	19631-ZE3-W00	SHROUD	1	1	1	1	-		
	19631-Z5T-000	.....	-	-	-	-	1		
3	90013-883-000	BOLT, FLANGE, 6X12(CT200) ...	6	6	6	6	6		

CARBURETOR(1)

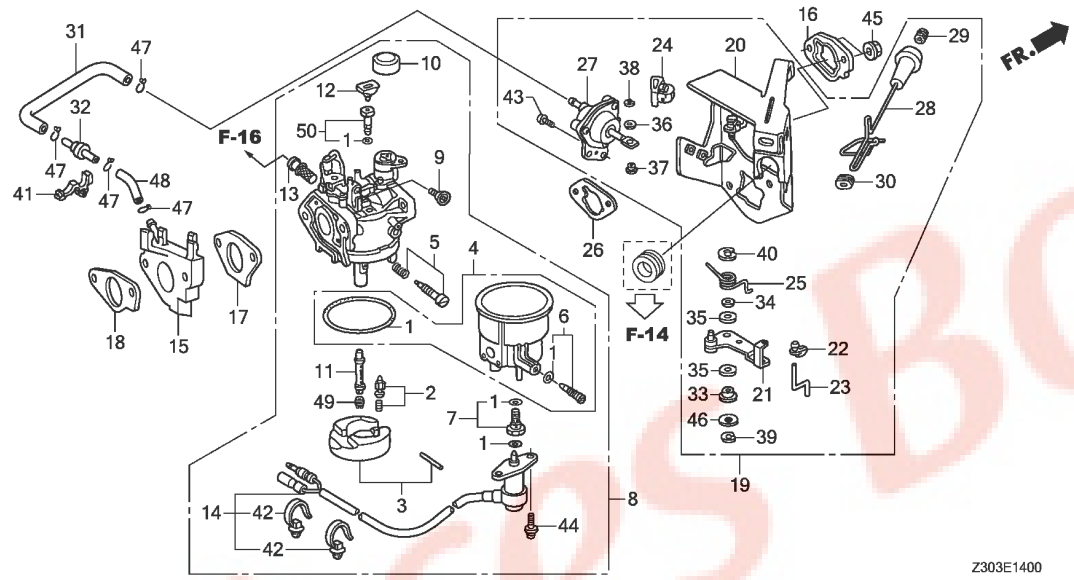

Ref. No.	L.O.N.	(Relative ref. Number) Description	F.R.T.
1	3111B1	GASKET SET, CARBURETOR ·····	0.5
2		(3)	
	3111E1	VALVE SET, FLOAT AND/OR FLOAT SET ·····	0.4
4	3111A3	CHAMBER SET, FLOAT AND/OR GASKET, FLOAT CHAMBER ·····	0.4
8	3111F3	CARBURETOR ·····	0.4
14	6211C0	VALVE, CARBURETOR SOLENOID ···	0.4
15		(18)	
	3111C0	INSULATOR, CARBURETOR AND/OR PACKING, INSULATOR ·····	0.4
16	3111D9	SPACER, CARBURETOR ·····	0.2
17	3111C8	PACKING, CARBURETOR ·····	0.4
19	8101R1	STAY, MANUAL CHOKE ·····	0.2
21	8101F9	LEVER, CARBURETOR CHOKE ·····	0.3
26	3121D9	PACKING, AIR CLEANER ·····	0.2
27	3111A7	DIAPHRAGM, CARBURETOR ·····	0.3
28	8101Q2	ROD, CHOKE CONTROL ·····	0.2
32	311175	VALVE, DASHPOT CHECK ·····	0.2
49		(11)	
	3111C3	JET, MAIN ·····	0.4
50	3111N2	JET SET, PILOT ·····	0.4

Ref. No.	Part No.	Description	Reqd. QTY EG 5500 CX	EG 6500 CX	EG 5500 CXS	EG 6500 CXS	EG 5500 CL	Serial No.	Parts catalogue code
1	16010-ZE3-701	GASKET SET ·····	1	1	1	1	-		
2	16011-ZA0-931	VALVE SET, FLOAT ·····	1	1	1	1	-		
3	16013-Z1C-003	FLOAT SET ·····	1	1	1	1	-		
4	16015-Z7B-D11	CHAMBER SET, FLOAT ·····	1	1	1	1	-		
5	16016-ZF6-D40	SCREW SET ·····	1	1	1	1	-		
6	16024-124-760	SCREW SET, DRAIN ·····	1	1	1	1	-		
7	16028-ZA0-931	SCREW SET ·····	1	1	1	1	-		
8	16100-Z7E-E61	CARBURETOR ASSY.(BE89V A) ···	1	1	1	1	-		
9	16124-ZE0-005	SCREW, THROTTLE STOP ·····	1	1	1	1	-		
10	16148-141-881	CAP, CHOKE DUST ·····	1	1	1	1	-		
11	16166-ZF6-005	NOZZLE, MAIN ·····	1	1	1	1	-		
12	16172-ZE3-W10	COLLAR, SETTING ·····	1	1	1	1	-		
13	16176-Z2G-D51	SCREEN, FUEL STRAINER ·····	1	1	1	1	-		
14	16200-Z7E-E61	VALVE ASSY., SOLENOID ·····	1	1	1	1	-		
15	16211-Z7E-700	INSULATOR, CARBURETOR ·····	1	1	1	1	-		
16	16220-ZA0-702	SPACER COMP., CARBURETOR ····	1	1	1	1	-		
17	16221-ZF6-800	PACKING, CARBURETOR ·····	1	1	1	1	-		
18	16223-ZE3-W00	PACKING, INSULATOR ·····	1	1	1	1	-		
19	16260-Z7E-E60	STAY ASSY., MANUAL CHOKE ····	1	1	1	1	-		
20	16261-Z7E-E60	STAY COMP., DIAPHRAGM ·····	1	1	1	1	-		
21	16262-ZE2-711	LEVER, CHOKE ·····	1	1	1	1	-		
22	16263-Z7B-000	JOINT, ROD ·····	1	1	1	1	-		
23	16264-ZE2-701	ROD, CHOKE ·····	1	1	1	1	-		
24	16265-Z7E-000	STOPPER, CHOKE ROD ·····	1	1	1	1	-		
25	16268-ZE2-721	SPRING, MANUAL CHOKE ·····	1	1	1	1	-		

CARBURETOR(1)

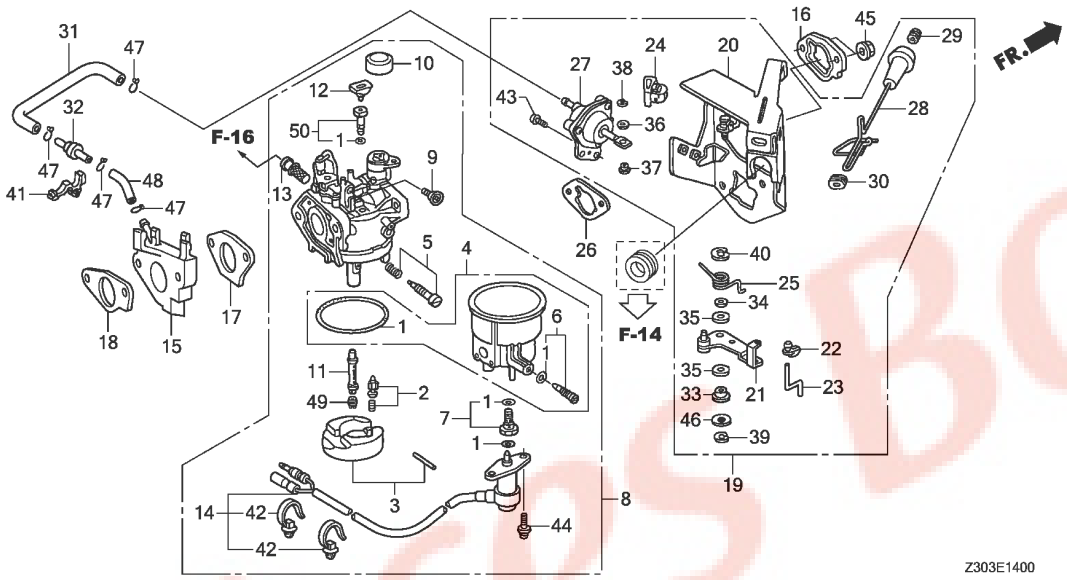

Ref. No.	Part No.	Description	Reqd. QTY EG 5500 CX	EG 6500 CX	EG 5500 CXS	EG 6500 CXS	EG 5500 CL	Serial No.	Parts catalogue code
26	16269-ZA0-800	PACKING, AIR CLEANER	1	1	1	1	-		
27	16400-ZE2-704	DIAPHRAGM ASSY.	1	1	1	1	-		
28	16611-Z7E-E60	ROD, CHOKE CONTROL	1	1	1	1	-		
29	16613-893-000	GROMMET, CHOKE ROD	1	1	1	1	-		
30	16615-893-000	GUIDE, CHOKE ROD	1	1	1	1	-		
31	16882-Z7E-E60	TUBE, DIAPHRAGM	1	1	1	1	-		
32	36135-ZF6-D41	VALVE, DASHPOT CHECK	1	1	1	1	-		
33	53149-964-003	BUSH, ARM PIVOT	1	1	1	1	-		
34	90431-ZE2-700	WASHER, CHOKE LEVER	1	1	1	1	-		
35	90432-ZE2-700	SEAL, CHOKE LEVER	2	2	2	2	-		
36	90433-ZE2-700	WASHER, THRUST, 2.7X8	1	1	1	1	-		
37	90434-ZE2-700	COLLAR, LEVER	1	1	1	1	-		
38	90601-Z7E-000	E-RING, 2MM	1	1	1	1	-		
39	90602-Z7E-000	E-RING, 4MM	1	1	1	1	-		
40	90603-Z7E-000	E-RING, 7MM	1	1	1	1	-		
41	90650-SD9-003	CLIP, WIRE HARNESS	1	1	1	1	-		
42	91541-S0A-003	CLIP, HARNESS BAND(BLACK) (145MM)	2	2	2	2	-		
43	93500-05012-0A	SCREW, PAN, 5X12	2	2	2	2	-		
44	93892-05012-18	SCREW-WASHER, 5X12	2	2	2	2	-		
45	94050-06000	NUT, FLANGE, 6MM	2	2	2	2	-		
46	94103-05000	WASHER, PLAIN, 5MM	1	1	1	1	-		
47	95002-02070	CLIP, TUBE(B7)	4	4	4	4	-		
48	95005-35075-10	TUBE, 3.5X75(95005-35001-10M)	1	1	1	1	-		
49	99101-ZH8-0980	JET, MAIN, #98	(1)	(1)	(1)	(1)	-		

CARBURETOR(1)

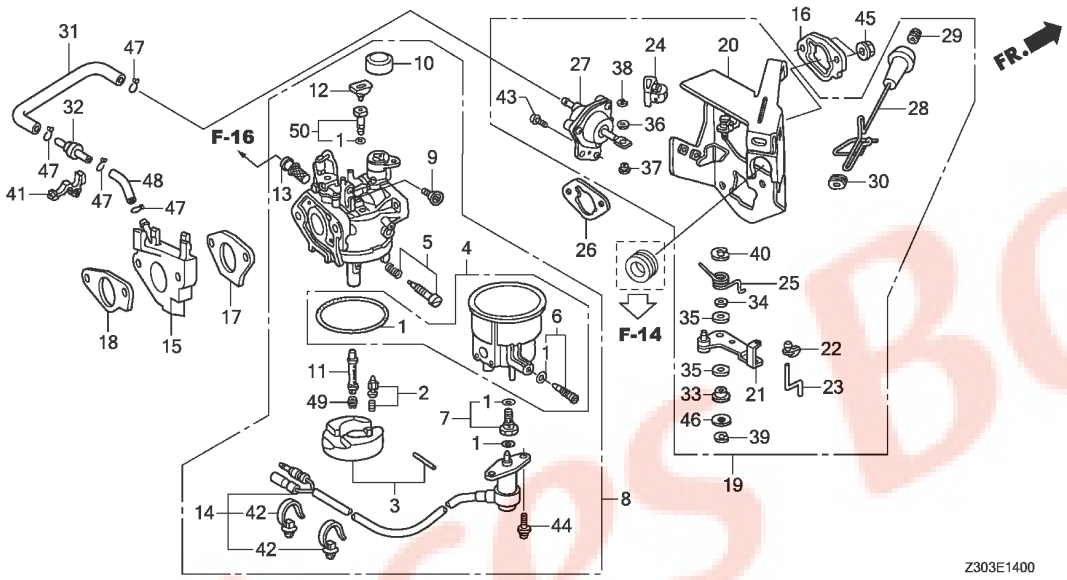

Ref. No.	Part No.	Description	Reqd. QTY EG 5500 CX	EG 6500 CX	EG 5500 CXS	EG 6500 CXS	EG 5500 CL	Serial No.	Parts catalogue code
49)	99101-ZH8-1000	JET, MAIN, #100	(1)	(1)	(1)	(1)	-		
	99101-ZH8-1020	JET, MAIN, #102	1	1	1	1	-		
50	99204-ZA0-0450	JET SET, PILOT, #45	1	1	1	1	-		

CARBURETOR(2)

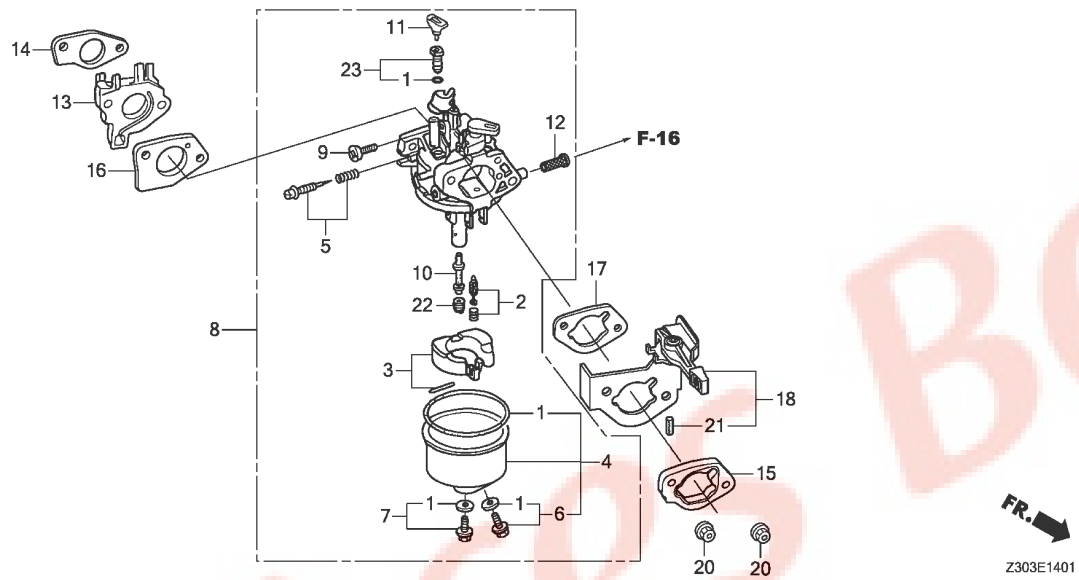

Ref. No.	L.O.N.	(Relative ref. Number) Description	F.R.T.
1	3111G1	GASKET SET, CARBURETOR(A) ----	0.3
2		(3)	
	3101P3	FLOAT SET, VAPOR SEPARATOR(A)	0.3
4	3111A3	CHAMBER SET, FLOAT AND/OR GASKET, FLOAT CHAMBER -------	0.2
8	3111G7	CARBURETOR(A) ----------	0.2
13		(14)	
	3111G2	INSULATOR, CARBURETOR AND/OR PACKING, INSULATOR(A) -------	0.2
15	3111D9	SPACER, CARBURETOR ----------	0.2
16	3111G5	PACKING, CARBURETOR(A) -------	0.2
17	3121H2	PACKING, AIR CLEANER(A) ------	0.2
18	3111A5	CONTROL, CARBURETOR CHOKE ----	0.2
22		(10)	
	3111G4	JET, MAIN(A) ----------	0.3
23	3111W9	JET SET, PILOT(A) ----------	0.2

Ref. No.	Part No.	Description	Reqd. QTY EG 5500 CX	EG 6500 CX	EG 5500 CXS	EG 6500 CXS	EG 5500 CL	Serial No.	Parts catalogue code
1	16010-ZF5-900	GASKET SET ----------	-	-	-	-	1		
2	16011-ZA0-931	VALVE SET, FLOAT ----------	-	-	-	-	1		
3	16013-Z1C-003	FLOAT SET ----------	-	-	-	-	1		
4	16015-ZE8-005	CHAMBER SET, FLOAT ----------	-	-	-	-	1		
5	16016-ZF6-D40	SCREW SET ----------	-	-	-	-	1		
6	16024-ZE1-811	SCREW SET, DRAIN ----------	-	-	-	-	1		
7	16028-ZE0-005	SCREW SET ----------	-	-	-	-	1		
8	16100-Z1C-E22	CARBURETOR ASSY.(BE95A A) ---	-	-	-	-	1		
9	16124-ZE0-005	SCREW, THROTTLE STOP --------	-	-	-	-	1		
10	16166-Z1C-E21	NOZZLE, MAIN ----------	-	-	-	-	1		
11	16172-ZE3-W10	COLLAR, SETTING ----------	-	-	-	-	1		
12	16176-Z2G-D51	SCREEN, FUEL STRAINER -------	-	-	-	-	1		
13	16211-Z5T-000	INSULATOR, CARBURETOR -------	-	-	-	-	1		
14	16212-Z5T-000	PACKING, CARBURETOR INSULATOR	-	-	-	-	1		
15	16220-ZA0-702	SPACER COMP., CARBURETOR ----	-	-	-	-	1		
16	16221-Z5T-000	PACKING, CARBURETOR ---------	-	-	-	-	1		
17	16269-ZA0-800	PACKING, AIR CLEANER --------	-	-	-	-	1		
18	16620-Z1C-000	BASE COMP., CHOKE ----------	-	-	-	-	1		
20	94050-06000	NUT, FLANGE, 6MM ----------	-	-	-	-	2		
21	94305-20122	PIN, SPRING, 2X12 ----------	-	-	-	-	1		
22	99101-ZH8-0980	JET, MAIN, #98 ----------	-	-	-	-	(1)		
	99101-ZH8-1020	JET, MAIN, #102 ----------	-	-	-	-	(1)		
	99101-ZH8-1050	JET, MAIN, #105 ----------	-	-	-	-	1		
23	99204-ZA0-0400	JET SET, PILOT, #40 ---------	-	-	-	-	1		

FLYWHEEL

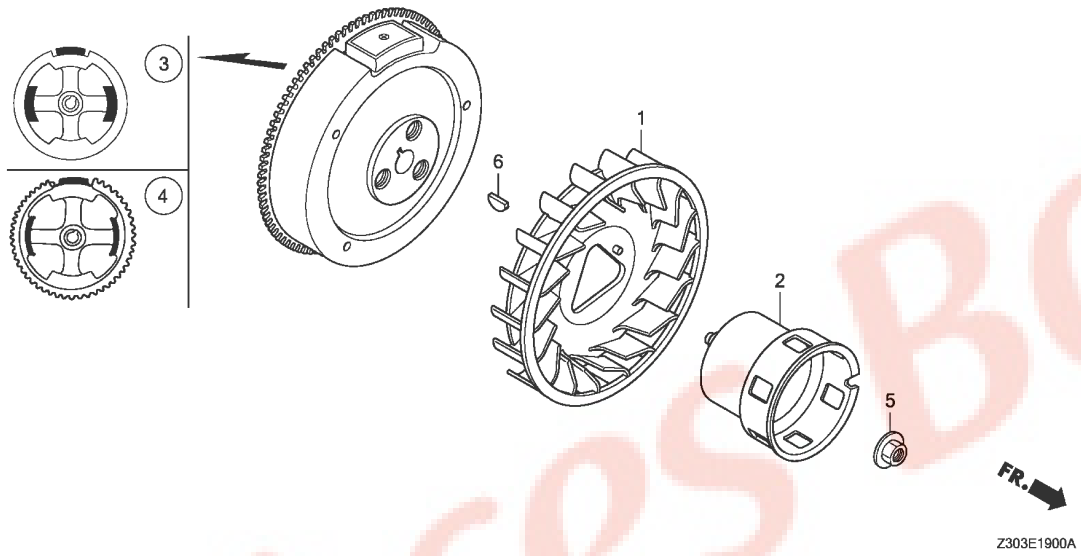

Ref. No.	L.O.N.	(Relative ref. Number) Description	F.R.T.
1	1141G7	FAN, ENGINE COOLING ----------	0.5
	1141G7C	.With starter motor add ------	0.1
2	1121A9	PULLEY, RECOIL STARTER -------	0.5
	1121A9B	.With starter motor add ------	0.1
3		(4)	
	2161B5	FLYWHEEL ----------	0.6
	2161B5C	.With starter motor add ------	0.1

Ref. No.	Part No.	Description	Reqd. QTY EG 5500 CX	EG 6500 CX	EG 5500 CXS	EG 6500 CXS	EG 5500 CL	Serial No.	Parts catalogue code
1	19511-Z7E-700	FAN, COOLING ----------	1	1	1	1	-		
	19511-ZK6-D70	----------	-	-	-	-	1		
2	28451-Z7E-000	PULLEY, STARTER ----------	1	1	1	1	-		
	28451-ZE3-W01	----------	-	-	-	-	1		
3	31110-Z7E-811	FLYWHEEL COMP.(LAMP) --------	1	1	-	-	-		
	31110-Z5T-810	----------	-	-	-	-	1		
4	31110-Z7E-821	FLYWHEEL COMP.(SEL-LAMP) ----	-	-	1	1	-		
5	90201-ZE3-V00	NUT, SPECIAL, 16MM ----------	1	1	1	1	1		
6	90741-ZE2-000	KEY, SPECIAL WOODRUFF, 25X18	1	1	1	1	1		

IGNITION COIL(1)

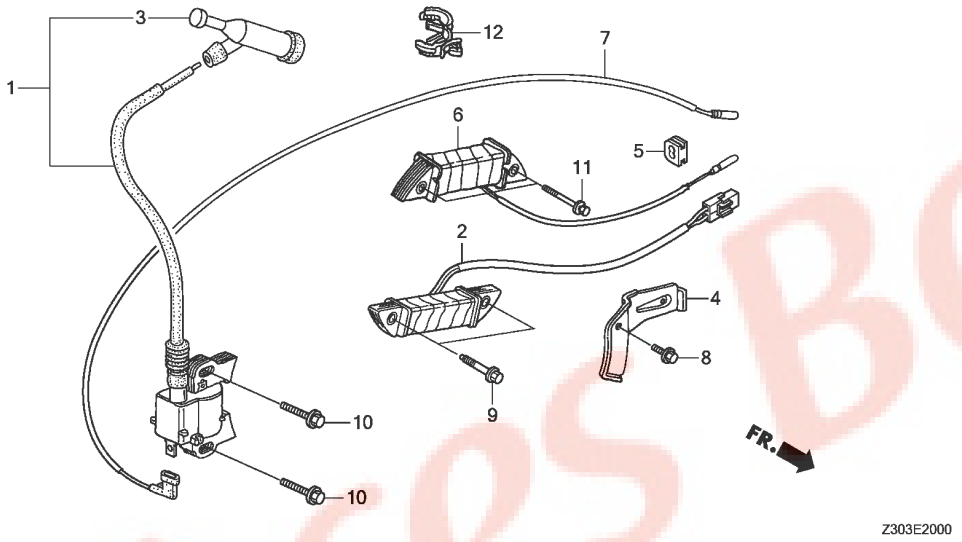

Ref. No.	L.O.N.	(Relative ref. Number) Description	F.R.T.
1	6141A5	COIL, IGNITION(ONE) ----------	0.4
2		(6)	
	6141A9	COIL, POWER ----------	0.7
	6141A9A	.With starter motor add ------	0.1
7	6111B3	CORD, STOP SWITCH ----------	0.5

Ref. No.	Part No.	Description	Reqd. QTY EG 5500 CX	EG 6500 CX	EG 5500 CXS	EG 6500 CXS	EG 5500 CL	Serial No.	Parts catalogue code
1	30500-Z7E-003	COIL ASSY., IGNITION --------	1	1	1	1	-		
2	30595-Z7E-003	COIL ASSY., POWER ----------	1	1	1	1	-		
3	30700-Z1T-003	CAP ASSY., NOISE SUPPRESSOR -	1	1	1	1	-		
4	31511-Z7E-000	CLAMPER, CORD ----------	1	1	1	1	-		
5	31512-ZE2-000	GROMMET, CORD ----------	1	1	1	1	-		
6	31650-Z7E-003	COIL ASSY., FUEL CUT --------	1	1	1	1	-		
7	36101-ZE3-800	CORD, STOP SWITCH(470MM) ----	1	1	1	1	-		
8	90013-883-000	BOLT, FLANGE, 6X12(CT200) ---	1	1	1	1	-		
9	90014-ZE6-000	BOLT, FLANGE, 6X35(CT200) ---	2	2	2	2	-		
10	90015-883-000	BOLT, FLANGE, 6X28(CT200) ---	2	2	2	2	-		
11	90016-ZE8-000	BOLT, FLANGE, 6X45(CT200) ---	2	2	2	2	-		
12	90684-Z7E-000	CLIP, HARNESS ----------	1	1	1	1	-		

IGNITION COIL(2)

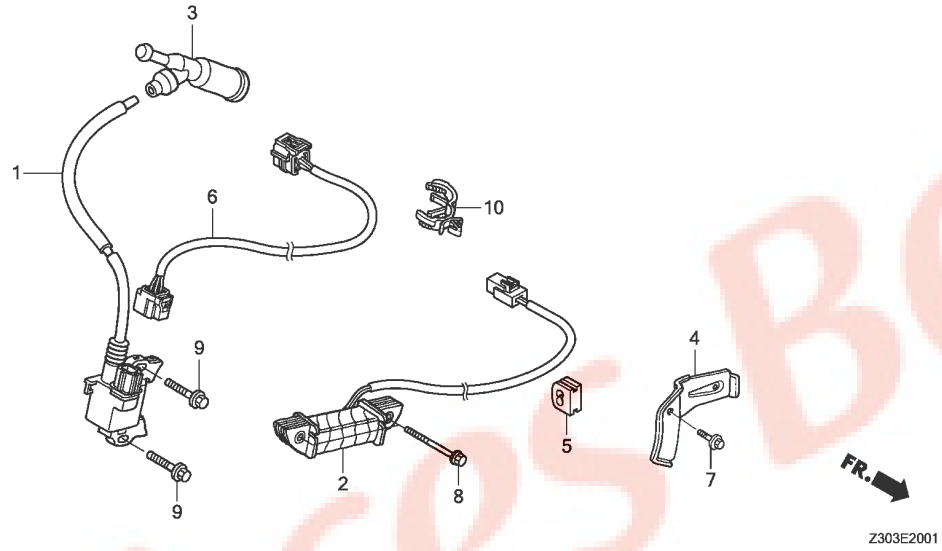

Ref. No.	L.O.N.	(Relative ref. Number) Description	F.R.T.
1	6141A5	COIL, IGNITION(ONE) ----------	0.4
2	6141A9	COIL, POWER ----------	0.7
	6141A9A	.With starter motor add ------	0.1
3	6141B8	TERMINAL, HIGH TENSION -------	0.1
6	6111C0	HARNESS, ENGINE WIRE ---------	0.9
		.INCLUDES: Diagnosing time	

Ref. No.	Part No.	Description	Reqd. QTY EG 5500 CX	EG 6500 CX	EG 5500 CXS	EG 6500 CXS	EG 5500 CL	Serial No.	Parts catalogue code
1	30500-Z5T-003	COIL ASSY., IGNITION --------	-	-	-	-	1		
2	30595-Z7E-003	COIL ASSY., POWER ----------	-	-	-	-	1		
3	30700-Z1C-811	CAP ASSY., NOISE SUPPRESSOR (NGK Y-EZD)	-	-	-	-	1		
4	31511-ZE3-000	CLAMPER, CORD ----------	-	-	-	-	1		
5	31512-ZE2-000	GROMMET, CORD ----------	-	-	-	-	1		
6	32110-Z1C-E20	HARNESS ASSY., ENGINE WIRE --	-	-	-	-	1		
7	90013-883-000	BOLT, FLANGE, 6X12(CT200) ---	-	-	-	-	1		
8	90014-ZE6-000	BOLT, FLANGE, 6X35(CT200) ---	-	-	-	-	2		
9	90015-883-000	BOLT, FLANGE, 6X28(CT200) ---	-	-	-	-	2		
10	90684-ZA0-601	CLIP, HARNESS ----------	-	-	-	-	1		

STARTER MOTOR

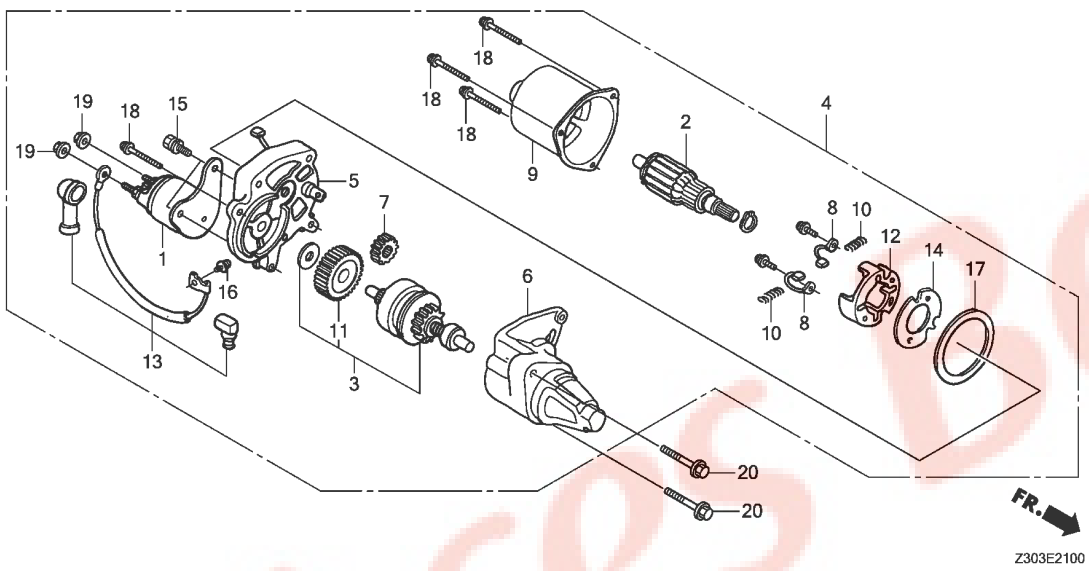

Ref. No.	L.O.N.	(Relative ref. Number) Description	F.R.T.
1	6121E5	CONTACTOR, STARTER	0.6
2	6121A0	ARMATURE, STARTER	0.7
3	6121B0	CLUTCH, OVERRUNNING	0.6
4	6121D5	MOTOR, STARTER	0.5
5	6121C3	BRACKET, STARTER :CENTER	0.7
6	6121D2	BRACKET, STARTER :FRONT	0.5
7	6121E8	GEAR, STARTER DRIVE PINION	0.6
8	6121A9	BRUSH, STARTER	0.7
11	6121B5	GEAR, STARTER REDUCTION	0.6
12	6121B6	HOLDER, STARTER BRUSH	0.6
13	6121D0	WIRE, WATER COVER	0.6

Ref. No.	Part No.	Description	Reqd. QTY EG 5500 CX	EG 6500 CX	EG 5500 CXS	EG 6500 CXS	EG 5500 CL	Serial No.	Parts catalogue code
1	31204-ZA0-003	CONTACTOR ASSY.	-	-	1	1	-		
2	31206-ZE3-003	ARMATURE COMP.	-	-	1	1	-		
3	31207-ZE3-003	CLUTCH COMP., OVERRUNNING	-	-	1	1	-		
4	31210-ZE3-023	MOTOR UNIT, STARTER	-	-	1	1	-		
5	31211-ZE2-003	BRACKET, CENTER	-	-	1	1	-		
6	31212-ZE3-003	BRACKET, FR.	-	-	1	1	-		
7	31213-ZE2-003	GEAR, DRIVE PINION	-	-	1	1	-		
8	31215-ZE2-003	BRUSH	-	-	2	2	-		
9	31218-ZE3-003	YOKE COMP.	-	-	1	1	-		
10	31219-ZE2-003	SPRING, BRUSH RETURN	-	-	4	4	-		
11	31222-ZE3-791	GEAR, REDUCTION	-	-	1	1	-		
12	31231-ZE2-003	HOLDER, BRUSH	-	-	1	1	-		
13	31232-ZE3-003	WIRE, WATER COVER	-	-	1	1	-		
14	31233-ZE2-003	INSULATOR	-	-	1	1	-		
15	90007-ZE2-003	BOLT-WASHER, 5X14	-	-	2	2	-		
16	90110-ZE2-003	SCREW-WASHER, 4X6	-	-	1	1	-		
17	91601-ZE2-003	PACKING	-	-	1	1	-		
18	93892-05032-18	SCREW-WASHER, 5X32	-	-	4	4	-		
19	94070-06080	NUT-WASHER, 6MM	-	-	2	2	-		
20	95701-08035-08	BOLT, FLANGE, 8X35	-	-	2	2	-		

CONTROL

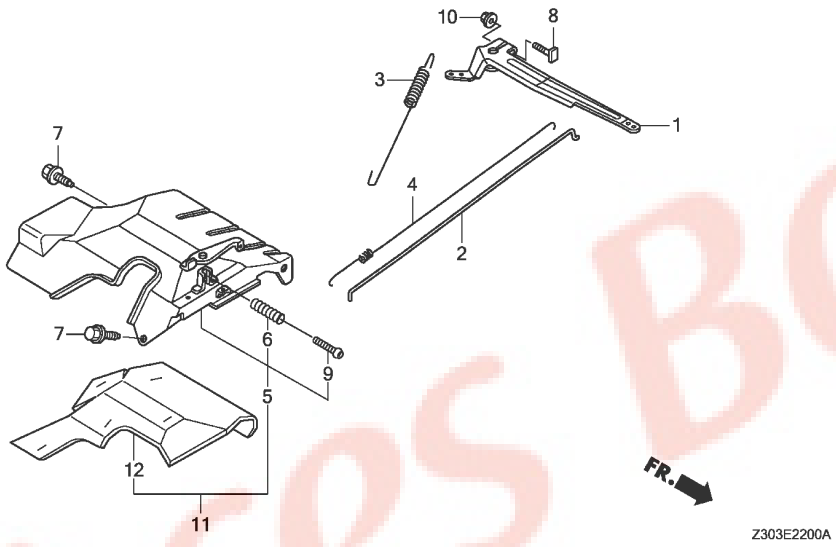

Ref. No.	L.O.N.	(Relative ref. Number) Description	F.R.T.
1	1161A0	ARM, GOVERNOR ----------	0.7
2	1161B1	ROD, GOVERNOR ----------	0.7
3	1161C5	SPRING, GOVERNOR ----------	0.7
4	1161C2	SPRING, THROTTLE RETURN ------	0.7
5	1161A5	CONTROL, THROTTLE/GOVERNOR ---	1.0
	1161D1	CONTROL, THROTTLE/GOVERNOR(A)	0.9
		.NOTE: CL model	

Ref. No.	Part No.	Description	Reqd. QTY EG 5500 CX	EG 6500 CX	EG 5500 CXS	EG 6500 CXS	EG 5500 CL	Serial No.	Parts catalogue code
1	16551-ZE3-000	ARM, GOVERNOR ----------	1	1	1	1	1		
2	16555-ZE3-000	ROD, GOVERNOR ----------	1	1	1	1	1		
3	16561-ZK6-D70	SPRING, GOVERNOR ----------	1	1	1	1	1		
4	16562-ZE3-000	SPRING, THROTTLE RETURN -----	1	1	1	1	1		
5	16570-ZK3-D70	CONTROL ASSY. ----------	1	1	1	1	-		
6	16584-883-300	SPRING, CONTROL ADJUSTING ---	1	1	1	1	1		
7	90013-883-000	BOLT, FLANGE, 6X12(CT200) ---	2	2	2	2	2		
8	90015-ZE5-010	BOLT, GOVERNOR ARM ----------	1	1	1	1	-		
	90015-Z5T-000	----------	-	-	-	-	1		
9	93500-05035-0A	SCREW, PAN, 5X35 ----------	1	1	1	1	1		
10	94050-06000	NUT, FLANGE, 6MM ----------	1	1	1	1	1		
11	16500-Z1C-E00	CONTROL ASSY. ----------	-	-	-	-	1		
12	16588-Z1C-E00	INSULATOR, CONTROL BASE -----	-	-	-	-	1		

CONTROL PANEL(1)

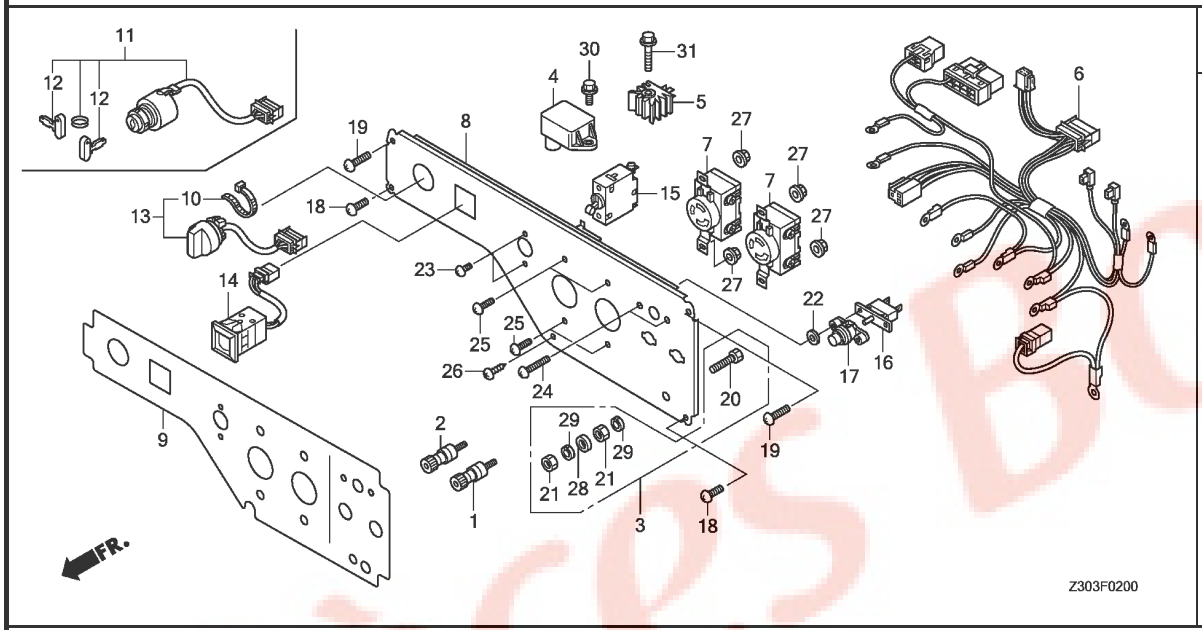

Ref. No.	L.O.N.	(Relative ref. Number) Description	F.R.T.
1	6221K6	TERMINAL, DIRECT CURRENT OUTPUT(+)	0.7
2	6221K7	TERMINAL, DIRECT CURRENT OUTPUT(-)	0.7
4	6221N6	DIODE, CONTROL PANEL DIRECT CURRENT	0.6
5	6131B7	RECTIFIER, REGULATOR	0.6
6	6111B9	HARNESS, CONTROL WIRE	0.9
7	6221D5	RECEPTACLE/CONSENT, CONTROL PANEL	0.7
	6221E5	RECEPTACLE/CONSENT, CONTROL PANEL :ALL	0.8
8	6221N9	PANEL, GENERATOR CONTROL	1.1
13		(11)	
	6151D9	SWITCH, ENGINE STOP	0.6
14	8121B4	METER, VOLT	0.6
15	6131C4	BREAKER, CIRCUIT	0.7
16	6221D4	PROTECTOR, CIRCUIT	0.6

Ref. No.	Part No.	Description	Reqd. QTY EG 5500 CX	EG 6500 CX	EG 5500 CXS	EG 6500 CXS	EG 5500 CL	Serial No.		Parts catalogue code
1	31408-880-000	TERMINAL, D.C. OUTPUT(+)	-	1	-	1	-	--------	--------	KH,RH,SH
2	31409-880-000	TERMINAL, D.C. OUTPUT(-)	-	1	-	1	-	--------	--------	KH,RH,SH
3	31428-Z22-A60	TERMINAL SET, EARTH	-	1	-	1	-	--------	--------	KH,RH,SH
4	31720-Z18-003	DIODE COMP.	-	1	-	1	-	--------	--------	KH,RH,SH
5	31750-735-013	RECTIFIER COMP., REGULATOR(5A)	-	-	-	1	-	--------	--------	KH,RH,SH
6	32150-Z30-D60	HARNESS ASSY., CONTROL WIRE (CX-R)	-	1	-	-	-	--------	--------	KH,RH
	32150-Z30-C70	HARNESS ASSY., CONTROL WIRE (CX-S)	-	1	-	-	-	--------	--------	SH
	32150-Z30-B60	HARNESS ASSY., CONTROL WIRE (CXS-R)	-	-	-	1	-	--------	--------	KH,RH
	32150-Z30-A70	HARNESS ASSY., CONTROL WIRE (CXS-S)	-	-	-	1	-	--------	--------	SH
7	32330-Z15-R60	RECEPTACLE(20A/250V)	-	2	-	2	-	--------	--------	KH,RH,SH
8	32345-Z30-D60ZA	PANEL COMP., CONTROL(CX-R) *NH105*...MAT BLACK (#15-#20)	-	1	-	-	-	--------	--------	KH,RH,SH
	32345-Z30-B60ZA	PANEL COMP., CONTROL(CXS-R) *NH105*...MAT BLACK (#15-#20)	-	-	-	1	-	--------	--------	KH,RH,SH
9	32366-Z30-D60	MARK, PANEL(CX-R)	-	1	-	-	-	--------	--------	KH,RH,SH
	32366-Z30-B60	MARK, PANEL(CXS-R)	-	-	-	1	-	--------	--------	KH,RH,SH
10	32902-892-003	BAND	-	1	-	-	-	--------	--------	KH,RH,SH
11	35100-Z30-003	SWITCH ASSY., COMBINATION	-	-	-	1	-	--------	--------	KH,RH,SH
12	35111-880-013	KEY COMP.	-	-	-	2	-	--------	--------	KH,RH,SH
13	35120-Z30-003	SWITCH ASSY., ENGINE STOP	-	1	-	-	-	--------	--------	KH,RH,SH
14	37450-Z30-B61	METER ASSY., VOLT	-	1	-	1	-	--------	--------	KH,RH,SH
15	38220-Z30-B61	BREAKER, CIRCUIT(25A)	-	1	-	1	-	--------	--------	KH,RH
	38220-Z30-A71	BREAKER, CIRCUIT(30A)	-	1	-	1	-	--------	--------	SH

CONTROL PANEL(1)

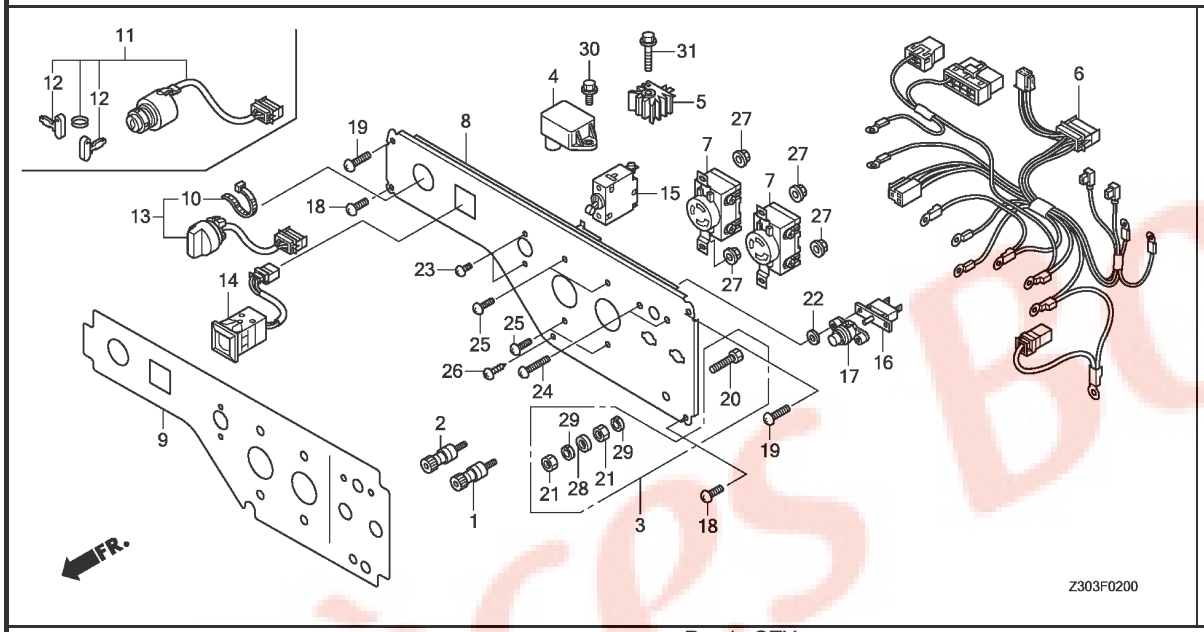

Ref. No.	Part No.	Description	Reqd. QTY EG 5500 CX	EG 6500 CX	EG 5500 CXS	EG 6500 CXS	EG 5500 CL	Serial No.		Parts catalogue code
16	38240-898-000	PROTECTOR, CIRCUIT(D.C.)	-	1	-	1	-	--------	--------	KH,RH,SH
17	38250-ZA8-701	LENS ASSY., PROTECTOR	-	1	-	1	-	--------	--------	KH,RH,SH
18	90101-Z15-000	SCREW, TRUSS, 6X18	-	2	-	2	-	--------	--------	KH,RH,SH
19	90101-Z30-000	SCREW, TRUSS, 6X30	-	2	-	2	-	--------	--------	KH,RH,SH
20	90111-Z22-A60	BOLT, HEX., 6X22	-	1	-	1	-	--------	--------	KH,RH,SH
21	90112-Z22-000	NUT, HEX., 6MM	-	2	-	2	-	--------	--------	KH,RH,SH
22	90401-ZR4-F30	WASHER, 4MM	-	2	-	2	-	--------	--------	KH,RH,SH
23	93500-03005-1A	SCREW, PAN, 3X5	-	2	-	2	-	--------	--------	KH,RH,SH
24	93500-03016-0A	SCREW, PAN, 3X16	-	2	-	2	-	--------	--------	KH,RH,SH
25	93500-04010-1A	SCREW, PAN, 4X10	-	4	-	4	-	--------	--------	KH,RH,SH
26	93913-15280	SCREW, TAPPING, 5X12(PO)	-	1	-	1	-	--------	--------	KH,RH,SH
27	94050-04000	NUT, FLANGE, 4MM	-	4	-	4	-	--------	--------	KH,RH,SH
28	94101-06000	WASHER, PLAIN, 6MM	-	1	-	1	-	--------	--------	KH,RH,SH
29	94111-06000	WASHER, SPRING, 6MM	-	2	-	2	-	--------	--------	KH,RH,SH
30	96001-06012-00	BOLT, FLANGE, 6X12	-	1	-	1	-	--------	--------	KH,RH,SH
31	96001-06030-00	BOLT, FLANGE, 6X30	-	-	-	1	-	--------	--------	KH,RH,SH

CONTROL PANEL(2)

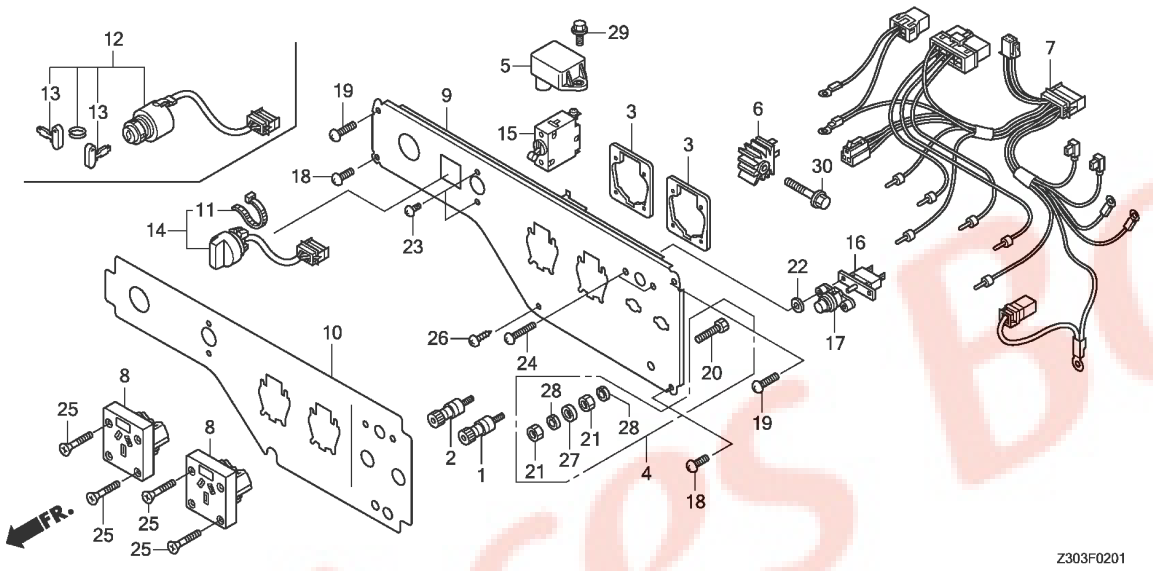

Ref. No.	L.O.N.	(Relative ref. Number) Description	F.R.T.
1	6221K6	TERMINAL, DIRECT CURRENT OUTPUT(+)	0.7
2	6221K7	TERMINAL, DIRECT CURRENT OUTPUT(-)	0.7
5	6221N6	DIODE, CONTROL PANEL DIRECT CURRENT	0.6
6	6131B7	RECTIFIER, REGULATOR	0.6
7	6111B9	HARNESS, CONTROL WIRE	0.9
8	6221J4	SOCKET, CONTROL PANEL	0.7
	6221J5	SOCKET, CONTROL PANEL :ALL	0.8
9	6221N9	PANEL, GENERATOR CONTROL	1.1
14		(12)	
	6151D9	SWITCH, ENGINE STOP	0.6
15	6131C4	BREAKER, CIRCUIT	0.7
16	6221D4	PROTECTOR, CIRCUIT	0.6

Ref. No.	Part No.	Description	Reqd. QTY EG 5500 CX	EG 6500 CX	EG 5500 CXS	EG 6500 CXS	EG 5500 CL	Serial No.		Parts catalogue code
1	31408-880-000	TERMINAL, D.C. OUTPUT(+)	1	-	1	-	-	--------	--------	UH
2	31409-880-000	TERMINAL, D.C. OUTPUT(-)	1	-	1	-	-	--------	--------	UH
3	31426-Z18-000	PLATE SET, CONSENT	2	-	2	-	-	--------	--------	UH
4	31428-Z22-A60	TERMINAL SET, EARTH	1	-	1	-	-	--------	--------	UH
5	31720-Z18-003	DIODE COMP.	1	-	1	-	-	--------	--------	UH
6	31750-735-013	RECTIFIER COMP., REGULATOR(5A)	-	-	1	-	-	--------	--------	UH
7	32150-Z30-C80	HARNESS ASSY., CONTROL WIRE (CX-U)	1	-	-	-	-			
	32150-Z30-A80	HARNESS ASSY., CONTROL WIRE (CXS-U)	-	-	1	-	-	--------	--------	UH
8	32332-Z07-C81	SOCKET(15A/250V)	2	-	2	-	-	--------	--------	UH
9	32345-Z30-C80ZA	PANEL COMP., CONTROL(CX-U) *NH105*...MAT BLACK (#15-#20)	1	-	-	-	-			
	32345-Z30-A80ZA	PANEL COMP., CONTROL(CXS-U) *NH105*...MAT BLACK (#15-#20)	-	-	1	-	-	--------	--------	UH
10	32366-Z30-C80	MARK, PANEL(CX-U)	1	-	-	-	-			
	32366-Z30-A80	MARK, PANEL(CXS-U)	-	-	1	-	-	--------	--------	UH
11	32902-892-003	BAND	1	-	-	-	-			
12	35100-Z30-003	SWITCH ASSY., COMBINATION	-	-	1	-	-	--------	--------	UH
13	35111-880-013	KEY COMP.	-	-	2	-	-	--------	--------	UH
14	35120-Z30-003	SWITCH ASSY., ENGINE STOP	1	-	-	-	-			
15	38220-ZR8-F61	BREAKER, CIRCUIT(23A)	1	-	1	-	-	--------	--------	UH
16	38240-898-000	PROTECTOR, CIRCUIT(D.C.)	1	-	1	-	-	--------	--------	UH
17	38250-ZA8-701	LENS ASSY., PROTECTOR	1	-	1	-	-	--------	--------	UH
18	90101-Z15-000	SCREW, TRUSS, 6X18	2	-	2	-	-	--------	--------	UH
19	90101-Z30-000	SCREW, TRUSS, 6X30	2	-	2	-	-	--------	--------	UH

F-2-1 CONTROL PANEL(2)

F 4

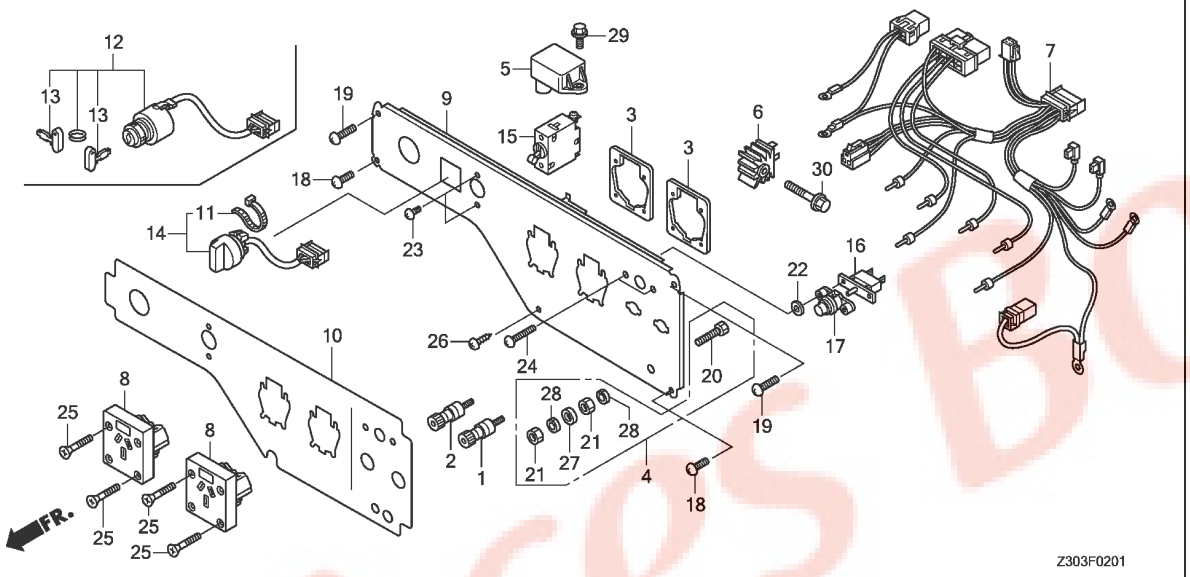

Ref. No.	Part No.	Description	Reqd. QTY EG 5500 CX	EG 6500 CX	EG 5500 CXS	EG 6500 CXS	EG 5500 CL	Serial No.		Parts catalogue code
20	90111-Z22-A60	BOLT, HEX., 6X22	1	-	1	-	-	--------	--------	UH
21	90112-Z22-000	NUT, HEX., 6MM	2	-	2	-	-	--------	--------	UH
22	90401-ZR4-F30	WASHER, 4MM	2	-	2	-	-	--------	--------	UH
23	93500-03005-1A	SCREW, PAN, 3X5	2	-	2	-	-	--------	--------	UH
24	93500-03016-0A	SCREW, PAN, 3X16	2	-	2	-	-	--------	--------	UH
25	93600-04020-1G	SCREW, FLAT, 4X20	8	-	8	-	-	--------	--------	UH
26	93913-15280	SCREW, TAPPING, 5X12(PO)	1	-	1	-	-	--------	--------	UH
27	94101-06000	WASHER, PLAIN, 6MM	1	-	1	-	-	--------	--------	UH
28	94111-06000	WASHER, SPRING, 6MM	2	-	2	-	-	--------	--------	UH
29	96001-06012-00	BOLT, FLANGE, 6X12	1	-	1	-	-	--------	--------	UH
30	96001-06030-00	BOLT, FLANGE, 6X30	-	-	1	-	-	--------	--------	UH

3

CONTROL PANEL(3)

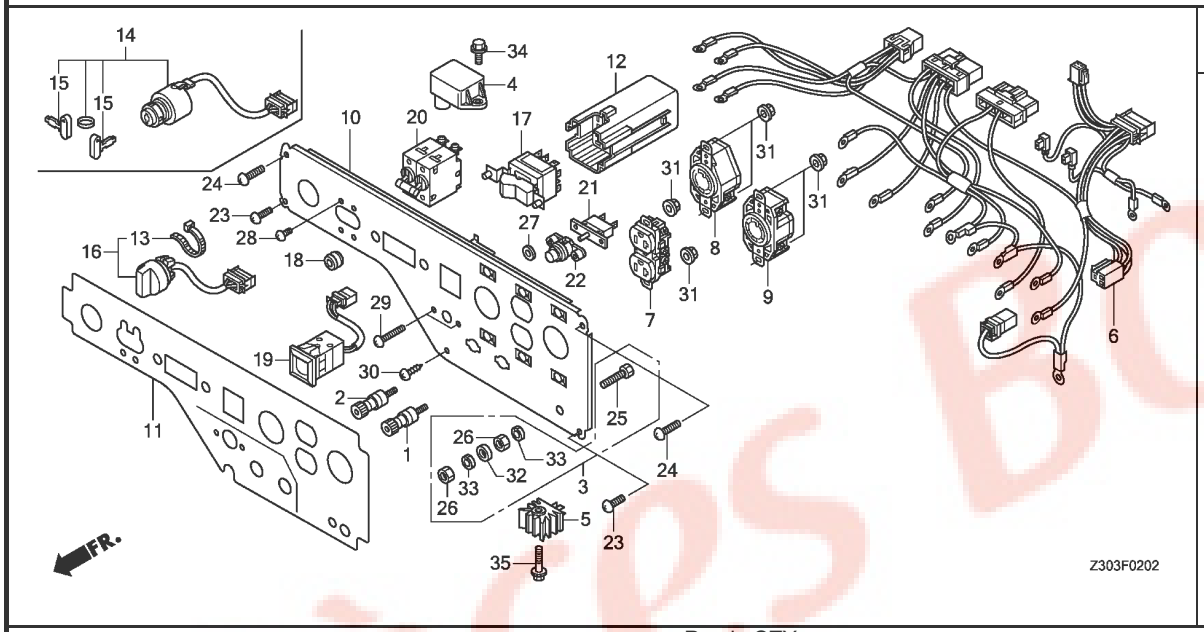

Ref. No.	L.O.N.	(Relative ref. Number) Description	F.R.T.
1	6221K6	TERMINAL, DIRECT CURRENT OUTPUT(+)	0.7
2	6221K7	TERMINAL, DIRECT CURRENT OUTPUT(-)	0.7
4	6221N6	DIODE, CONTROL PANEL DIRECT CURRENT	0.6
5	6131B7	RECTIFIER, REGULATOR	0.6
6	6111F9	HARNESS, CONTROL WIRE(A)	1.0
7		(8,9)	
	6221K5	RECEPTACLE/CONSENT, CONTROL PANEL(A)	0.8
	6221J3	RECEPTACLE/CONSENT, CONTROL PANEL(A) :ALL	0.9
10	6221T2	PANEL, GENERATOR CONTROL(A)	1.2
16		(14)	
	6151D9	SWITCH, ENGINE STOP	0.6
17	6151F1	SWITCH, VOLT CHANGE	0.7
19	8121B4	METER, VOLT	0.6
20	6131C4	BREAKER, CIRCUIT	0.7
21	6221D4	PROTECTOR, CIRCUIT	0.6

Ref. No.	Part No.	Description	Reqd. QTY EG 5500 CX	EG 6500 CX	EG 5500 CXS	EG 6500 CXS	EG 5500 CL	Serial No.		Parts catalogue code
1	31408-880-000	TERMINAL, D.C. OUTPUT(+)	-	1	-	1	-	--------	--------	LDH,LTH
2	31409-880-000	TERMINAL, D.C. OUTPUT(-)	-	1	-	1	-	--------	--------	LDH,LTH
3	31428-Z22-A60	TERMINAL SET, EARTH	-	1	-	1	-	--------	--------	LDH,LTH
4	31720-Z18-003	DIODE COMP.	-	1	-	1	-	--------	--------	LDH,LTH
5	31750-735-013	RECTIFIER COMP., REGULATOR(5A)	-	-	-	1	-	--------	--------	LDH,LTH
6	32150-Z30-D40	HARNESS ASSY., CONTROL WIRE (CX-LD)	-	1	-	-	-	--------	--------	LDH,LTH
	32150-Z30-B40	HARNESS ASSY., CONTROL WIRE (CXS-LD)	-	-	-	1	-	--------	--------	LDH,LTH
7	32330-Z18-B21	RECEPTACLE(20A-125V)	-	1	-	1	-	--------	--------	LDH,LTH
8	32332-Z22-E31	RECEPTACLE(30A-125V)	-	1	-	1	-	--------	--------	LDH,LTH
9	32334-Z22-A31	RECEPTACLE(30A-125/250V)	-	1	-	1	-	--------	--------	LDH,LTH
10	32345-Z30-D40ZA	PANEL COMP., CONTROL(CX-LD) *NH105*...MAT BLACK (#15-#20)	-	1	-	-	-	--------	--------	LDH,LTH
	32345-Z30-B40ZA	PANEL COMP., CONTROL(CXS-LD) *NH105*...MAT BLACK (#15-#20)	-	-	-	1	-	--------	--------	LDH,LTH
11	32366-Z30-D40	MARK, PANEL(CX-LD)	-	1	-	-	-	--------	--------	LDH
	32366-Z30-D10	MARK, PANEL(CX-LT)	-	1	-	-	-	--------	--------	LTH
	32366-Z30-B40	MARK, PANEL(CXS-LD)	-	-	-	1	-	--------	--------	LDH
	32366-Z30-B10	MARK, PANEL(CXS-LT)	-	-	-	1	-	--------	--------	LTH
12	32395-Z30-S31	COUPLER(12P)	-	1	-	1	-	--------	--------	LDH,LTH
13	32902-892-003	BAND	-	1	-	-	-	--------	--------	LDH,LTH
14	35100-Z30-003	SWITCH ASSY., COMBINATION	-	-	-	1	-	--------	--------	LDH,LTH
15	35111-880-013	KEY COMP.	-	-	-	2	-	--------	--------	LDH,LTH
16	35120-Z30-003	SWITCH ASSY., ENGINE STOP	-	1	-	-	-	--------	--------	LDH,LTH
17	35320-Z30-B41	SWITCH ASSY., VOLT CHANGE	-	1	-	1	-	--------	--------	LDH,LTH

CONTROL PANEL(3)

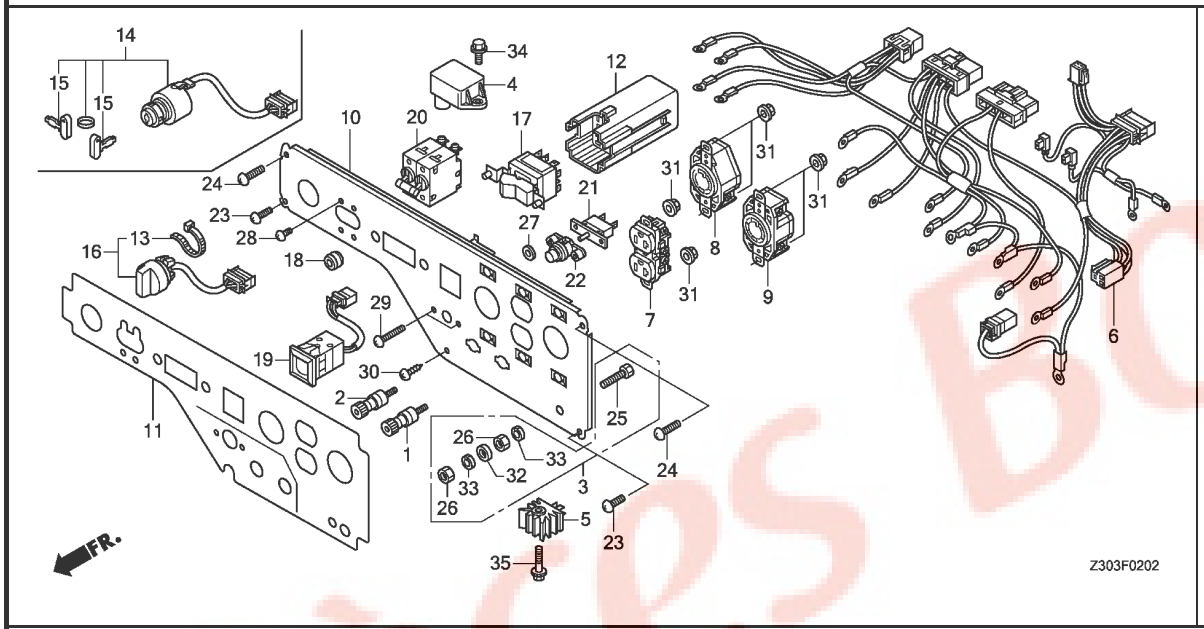

Ref. No.	Part No.	Description	Reqd. QTY EG 5500 CX	EG 6500 CX	EG 5500 CXS	EG 6500 CXS	EG 5500 CL	Serial No.		Parts catalogue code
18	35322-Z30-000	MOUNT, VOLT CHANGE SWITCH	-	2	-	2	-	--------	--------	LDH,LTH
19	37450-Z30-B41	METER ASSY., VOLT	-	1	-	1	-	--------	--------	LDH,LTH
20	38220-Z30-B41	BREAKER, CIRCUIT(27A)	-	1	-	1	-	--------	--------	LDH,LTH
21	38240-898-000	PROTECTOR, CIRCUIT(D.C.)	-	1	-	1	-	--------	--------	LDH,LTH
22	38250-ZA8-701	LENS ASSY., PROTECTOR	-	1	-	1	-	--------	--------	LDH,LTH
23	90101-Z15-000	SCREW, TRUSS, 6X18	-	2	-	2	-	--------	--------	LDH,LTH
24	90101-Z30-000	SCREW, TRUSS, 6X30	-	2	-	2	-	--------	--------	LDH,LTH
25	90111-Z22-A60	BOLT, HEX., 6X22	-	1	-	1	-	--------	--------	LDH,LTH
26	90112-Z22-000	NUT, HEX., 6MM	-	2	-	2	-	--------	--------	LDH,LTH
27	90401-ZR4-F30	WASHER, 4MM	-	2	-	2	-	--------	--------	LDH,LTH
28	93500-03005-1A	SCREW, PAN, 3X5	-	4	-	4	-	--------	--------	LDH,LTH
29	93500-03016-0A	SCREW, PAN, 3X16	-	2	-	2	-	--------	--------	LDH,LTH
30	93913-15280	SCREW, TAPPING, 5X12(PO)	-	1	-	1	-	--------	--------	LDH,LTH
31	94050-04000	NUT, FLANGE, 4MM	-	6	-	6	-	--------	--------	LDH,LTH
32	94101-06000	WASHER, PLAIN, 6MM	-	1	-	1	-	--------	--------	LDH,LTH
33	94111-06000	WASHER, SPRING, 6MM	-	2	-	2	-	--------	--------	LDH,LTH
34	96001-06012-00	BOLT, FLANGE, 6X12	-	1	-	1	-	--------	--------	LDH,LTH
35	96001-06030-00	BOLT, FLANGE, 6X30	-	-	-	1	-	--------	--------	LDH,LTH

CONTROL PANEL(4)

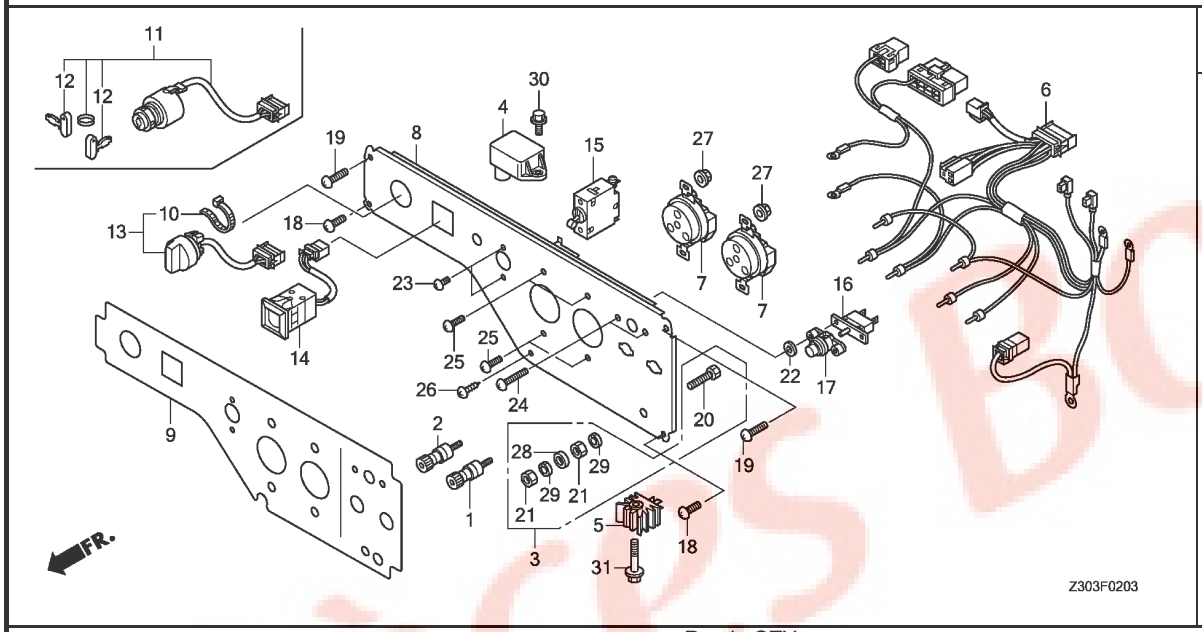

Ref. No.	L.O.N.	(Relative ref. Number) Description	F.R.T.
1	6221K6	TERMINAL, DIRECT CURRENT OUTPUT(+)	0.7
2	6221K7	TERMINAL, DIRECT CURRENT OUTPUT(-)	0.7
4	6221N6	DIODE, CONTROL PANEL DIRECT CURRENT	0.6
5	6131B7	RECTIFIER, REGULATOR	0.6
6	6111B9	HARNESS, CONTROL WIRE	0.9
7	6221J4	SOCKET, CONTROL PANEL	0.7
	6221J5	SOCKET, CONTROL PANEL :ALL	0.8
8	6221N9	PANEL, GENERATOR CONTROL	1.1
13		(11)	
	6151D9	SWITCH, ENGINE STOP	0.6
14	8121B4	METER, VOLT	0.6
15	6131C4	BREAKER, CIRCUIT	0.7
16	6221D4	PROTECTOR, CIRCUIT	0.6

Ref. No.	Part No.	Description	Reqd. QTY EG 5500 CX	EG 6500 CX	EG 5500 CXS	EG 6500 CXS	EG 5500 CL	Serial No.		Parts catalogue code
1	31408-880-000	TERMINAL, D.C. OUTPUT(+)	-	1	-	1	-	--------	--------	MH
2	31409-880-000	TERMINAL, D.C. OUTPUT(-)	-	1	-	1	-	--------	--------	MH
3	31428-Z22-A60	TERMINAL SET, EARTH	-	1	-	1	-	--------	--------	MH
4	31720-Z18-003	DIODE COMP.	-	1	-	1	-	--------	--------	MH
5	31750-735-013	RECTIFIER COMP., REGULATOR(5A)	-	-	-	1	-	--------	--------	MH
6	32150-Z30-D20	HARNESS ASSY., CONTROL WIRE (CX-M)	-	1	-	-	-	--------	--------	MH
	32150-Z30-B20	HARNESS ASSY., CONTROL WIRE (CXS-M)	-	-	-	1	-	--------	--------	MH
7	32331-ZA8-720	SOCKET(16A/250V)	-	2	-	2	-	--------	--------	MH
8	32345-Z30-D20ZA	PANEL COMP., CONTROL(CX-M) *NH105*...MAT BLACK (#15-#20)	-	1	-	-	-	--------	--------	MH
	32345-Z30-B20ZA	PANEL COMP., CONTROL(CXS-M) *NH105*...MAT BLACK (#15-#20)	-	-	-	1	-	--------	--------	MH
9	32366-Z30-D20	MARK, PANEL(CX-M)	-	1	-	-	-	--------	--------	MH
	32366-Z30-B20	MARK, PANEL(CXS-M)	-	-	-	1	-	--------	--------	MH
10	32902-892-003	BAND	-	1	-	-	-	--------	--------	MH
11	35100-Z30-003	SWITCH ASSY., COMBINATION	-	-	-	1	-	--------	--------	MH
12	35111-880-013	KEY COMP.	-	-	-	2	-	--------	--------	MH
13	35120-Z30-003	SWITCH ASSY., ENGINE STOP	-	1	-	-	-	--------	--------	MH
14	37450-Z30-B61	METER ASSY., VOLT	-	1	-	1	-	--------	--------	MH
15	38220-Z30-B61	BREAKER, CIRCUIT(25A)	-	1	-	1	-	--------	--------	MH
16	38240-898-000	PROTECTOR, CIRCUIT(D.C.)	-	1	-	1	-	--------	--------	MH
17	38250-ZA8-701	LENS ASSY., PROTECTOR	-	1	-	1	-	--------	--------	MH
18	90101-Z15-000	SCREW, TRUSS, 6X18	-	2	-	2	-	--------	--------	MH
19	90101-Z30-000	SCREW, TRUSS, 6X30	-	2	-	2	-	--------	--------	MH

CONTROL PANEL(4)

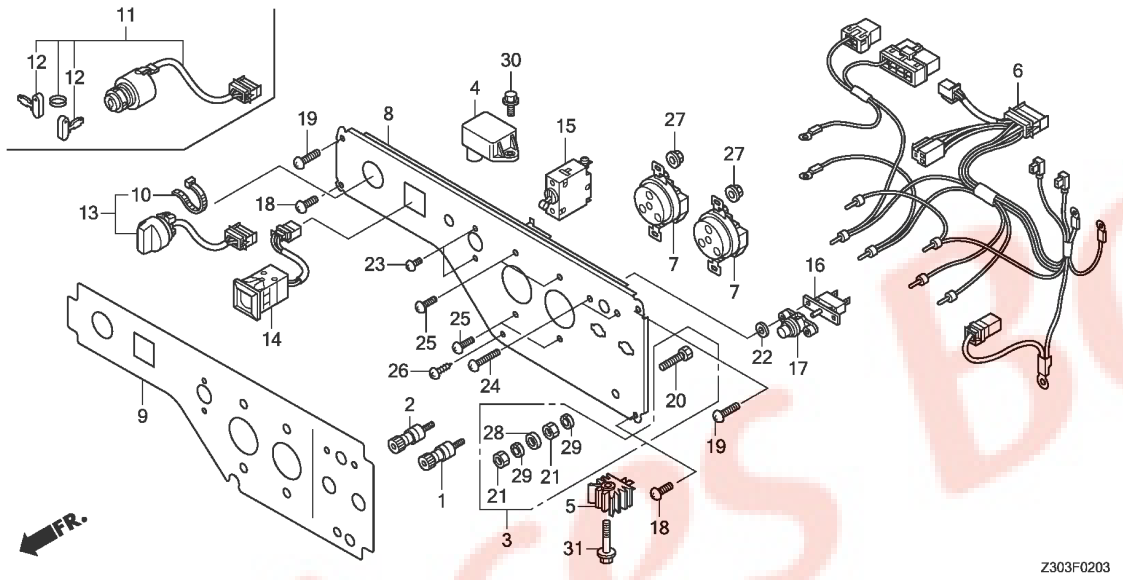

Ref. No.	Part No.	Description	Reqd. QTY EG 5500 CX	EG 6500 CX	EG 5500 CXS	EG 6500 CXS	EG 5500 CL	Serial No.		Parts catalogue code
20	90111-Z22-A60	BOLT, HEX., 6X22	-	1	-	1	-	--------	--------	MH
21	90112-Z22-000	NUT, HEX., 6MM	-	2	-	2	-	--------	--------	MH
22	90401-ZR4-F30	WASHER, 4MM	-	2	-	2	-	--------	--------	MH
23	93500-03005-1A	SCREW, PAN, 3X5	-	2	-	2	-	--------	--------	MH
24	93500-03016-0A	SCREW, PAN, 3X16	-	2	-	2	-	--------	--------	MH
25	93500-04010-1A	SCREW, PAN, 4X10	-	4	-	4	-	--------	--------	MH
26	93913-15280	SCREW, TAPPING, 5X12(PO)	-	1	-	1	-	--------	--------	MH
27	94050-04000	NUT, FLANGE, 4MM	-	4	-	4	-	--------	--------	MH
28	94101-06000	WASHER, PLAIN, 6MM	-	1	-	1	-	--------	--------	MH
29	94111-06000	WASHER, SPRING, 6MM	-	2	-	2	-	--------	--------	MH
30	96001-06012-00	BOLT, FLANGE, 6X12	-	1	-	1	-	--------	--------	MH
31	96001-06030-00	BOLT, FLANGE, 6X30	-	-	-	1	-	--------	--------	MH

CONTROL PANEL(5)

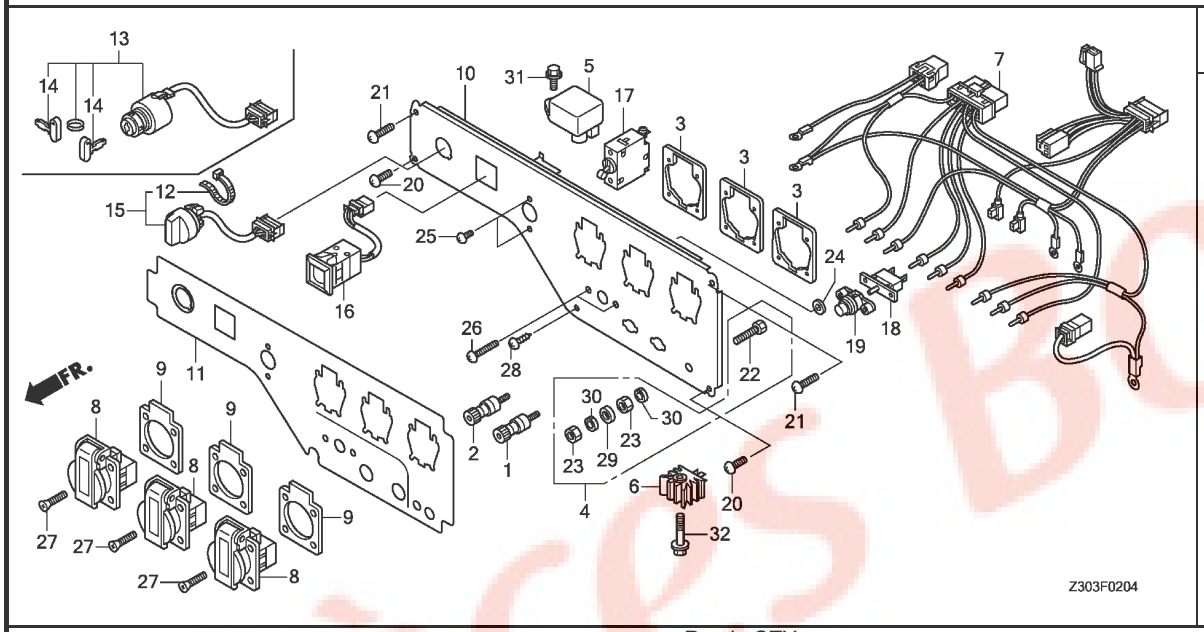

Ref. No.	L.O.N.	(Relative ref. Number) Description	F.R.T.
1	6221K6	TERMINAL, DIRECT CURRENT OUTPUT(+)	0.7
2	6221K7	TERMINAL, DIRECT CURRENT OUTPUT(-)	0.7
5	6221N6	DIODE, CONTROL PANEL DIRECT CURRENT	0.6
6	6131B7	RECTIFIER, REGULATOR	0.6
7	6111B9	HARNESS, CONTROL WIRE	0.9
8	6221D5	RECEPTACLE/CONSENT, CONTROL PANEL	0.7
	6221E5	RECEPTACLE/CONSENT, CONTROL PANEL :ALL	0.8
10	6221N9	PANEL, GENERATOR CONTROL	1.1
15		(13)	
	6151D9	SWITCH, ENGINE STOP	0.6
16	8121B4	METER, VOLT	0.6
17	6131C4	BREAKER, CIRCUIT	0.7
18	6221D4	PROTECTOR, CIRCUIT	0.6

Ref. No.	Part No.	Description	Reqd. QTY EG 5500 CX	EG 6500 CX	EG 5500 CXS	EG 6500 CXS	EG 5500 CL	Serial No.	Parts catalogue code
1	31408-880-000	TERMINAL, D.C. OUTPUT(+)	-	1	-	1	-	-------- --------	SKH
2	31409-880-000	TERMINAL, D.C. OUTPUT(-)	-	1	-	1	-	-------- --------	SKH
3	31426-Z18-000	PLATE SET, CONSENT	-	3	-	3	-	-------- --------	SKH
4	31428-Z22-A60	TERMINAL SET, EARTH	-	1	-	1	-	-------- --------	SKH
5	31720-Z18-003	DIODE COMP.	-	1	-	1	-	-------- --------	SKH
6	31750-735-013	RECTIFIER COMP., REGULATOR(5A)	-	-	-	1	-	-------- --------	SKH
7	32150-Z30-S10	HARNESS ASSY., CONTROL WIRE (CX-SK)	-	1	-	-	-	-------- --------	SKH
	32150-Z30-R10	HARNESS ASSY., CONTROL WIRE (CXS-SK)	-	-	-	1	-	-------- --------	SKH
8	32331-ZT3-C60	RECEPTACLE(16A/250V)	-	3	-	3	-	-------- --------	SKH
9	32335-875-610	PACKING, RECEPTACLE	-	3	-	3	-	-------- --------	SKH
10	32345-Z30-S10ZA	PANEL COMP., CONTROL(CX-SK) *NH105*...MAT BLACK (#15-#20)	-	1	-	-	-	-------- --------	SKH
	32345-Z30-R10ZA	PANEL COMP., CONTROL(CXS-SK) *NH105*...MAT BLACK (#15-#20)	-	-	-	1	-	-------- --------	SKH
11	32366-Z30-S10	MARK, PANEL(CX-SK)	-	1	-	-	-	-------- --------	SKH
	32366-Z30-R10	MARK, PANEL(CXS-SK)	-	-	-	1	-	-------- --------	SKH
12	32902-892-003	BAND	-	1	-	-	-	-------- --------	SKH
13	35100-Z30-003	SWITCH ASSY., COMBINATION	-	-	-	1	-	-------- --------	SKH
14	35111-880-013	KEY COMP.	-	-	-	2	-	-------- --------	SKH
15	35120-Z30-003	SWITCH ASSY., ENGINE STOP	-	1	-	-	-	-------- --------	SKH
16	37450-Z30-B61	METER ASSY., VOLT	-	1	-	1	-	-------- --------	SKH
17	38220-Z30-A71	BREAKER, CIRCUIT(30A)	-	1	-	1	-	-------- --------	SKH
18	38240-898-000	PROTECTOR, CIRCUIT(D.C.)	-	1	-	1	-	-------- --------	SKH
19	38250-ZA8-701	LENS ASSY., PROTECTOR	-	1	-	1	-	-------- --------	SKH

CONTROL PANEL(5)

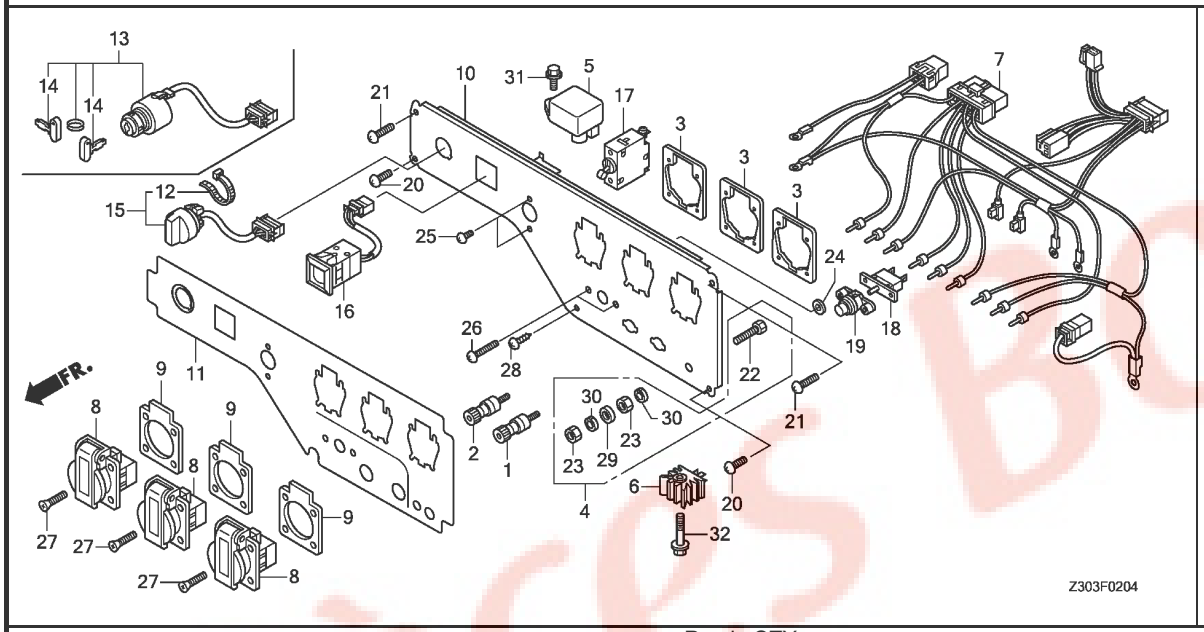

Ref. No.	Part No.	Description	Reqd. QTY EG 5500 CX	EG 6500 CX	EG 5500 CXS	EG 6500 CXS	EG 5500 CL	Serial No.		Parts catalogue code
20	90101-Z15-000	SCREW, TRUSS, 6X18	-	2	-	2	-	--------	--------	SKH
21	90101-Z30-000	SCREW, TRUSS, 6X30	-	2	-	2	-	--------	--------	SKH
22	90111-Z22-A60	BOLT, HEX., 6X22	-	1	-	1	-	--------	--------	SKH
23	90112-Z22-000	NUT, HEX., 6MM	-	2	-	2	-	--------	--------	SKH
24	90401-ZR4-F30	WASHER, 4MM	-	2	-	2	-	--------	--------	SKH
25	93500-03005-1A	SCREW, PAN, 3X5	-	2	-	2	-	--------	--------	SKH
26	93500-03016-0A	SCREW, PAN, 3X16	-	2	-	2	-	--------	--------	SKH
27	93600-04016-1G	SCREW, FLAT, 4X16	-	12	-	12	-	--------	--------	SKH
28	93913-15280	SCREW, TAPPING, 5X12(PO)	-	1	-	1	-	--------	--------	SKH
29	94101-06000	WASHER, PLAIN, 6MM	-	1	-	1	-	--------	--------	SKH
30	94111-06000	WASHER, SPRING, 6MM	-	2	-	2	-	--------	--------	SKH
31	96001-06012-00	BOLT, FLANGE, 6X12	-	1	-	1	-	--------	--------	SKH
32	96001-06030-00	BOLT, FLANGE, 6X30	-	-	-	1	-	--------	--------	SKH

CONTROL PANEL(6)

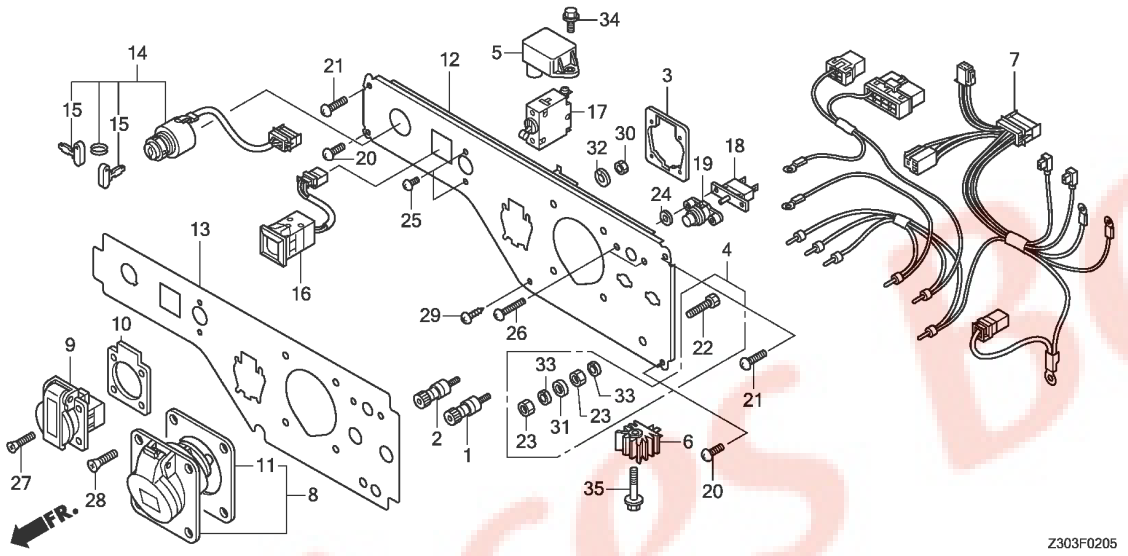

Ref. No.	L.O.N.	(Relative ref. Number) Description	F.R.T.
1	6221K6	TERMINAL, DIRECT CURRENT OUTPUT(+)	0.7
2	6221K7	TERMINAL, DIRECT CURRENT OUTPUT(-)	0.7
5	6221N6	DIODE, CONTROL PANEL DIRECT CURRENT	0.6
6	6131B7	RECTIFIER, REGULATOR	0.6
7	6111B9	HARNESS, CONTROL WIRE	0.9
8		(9)	
	6221D5	RECEPTACLE/CONSENT, CONTROL PANEL	0.7
	6221E5	RECEPTACLE/CONSENT, CONTROL PANEL :ALL	0.8
12	6221N9	PANEL, GENERATOR CONTROL	1.1
14	6151E1	SWITCH, COMBINATION	0.6
16	8121B4	METER, VOLT	0.6
17	6131C4	BREAKER, CIRCUIT	0.7
18	6221D4	PROTECTOR, CIRCUIT	0.6

Ref. No.	Part No.	Description	Reqd. QTY EG 5500 CX	EG 6500 CX	EG 5500 CXS	EG 6500 CXS	EG 5500 CL	Serial No.		Parts catalogue code
1	31408-880-000	TERMINAL, D.C. OUTPUT(+)	-	-	1	-	-	--------	--------	RGH
2	31409-880-000	TERMINAL, D.C. OUTPUT(-)	-	-	1	-	-	--------	--------	RGH
3	31426-Z18-000	PLATE SET, CONSENT	-	-	1	-	-	--------	--------	RGH
4	31428-Z22-A60	TERMINAL SET, EARTH	-	-	1	-	-	--------	--------	RGH
5	31720-Z18-003	DIODE COMP.	-	-	1	-	-	--------	--------	RGH
6	31750-735-013	RECTIFIER COMP., REGULATOR(5A)	-	-	1	-	-	--------	--------	RGH
7	32150-Z30-R70	HARNESS ASSY., CONTROL WIRE (CXS-RG)	-	-	1	-	-	--------	--------	RGH
8	32330-Z22-A90	RECEPTACLE(32A/250V)(KEDU)	-	-	1	-	-	--------	--------	RGH
9	32331-ZT3-C60	RECEPTACLE(16A/250V)	-	-	1	-	-	--------	--------	RGH
10	32335-875-610	PACKING, RECEPTACLE	-	-	1	-	-	--------	--------	RGH
11	32335-Z22-F90	PACKING	-	-	1	-	-	--------	--------	RGH
12	32345-Z30-R70ZA	PANEL COMP., CONTROL(CXS-RG) *NH105*...MAT BLACK (#15-#20)	-	-	1	-	-	--------	--------	RGH
13	32366-Z30-R70	MARK, PANEL(CXS-RG)	-	-	1	-	-	--------	--------	RGH
14	35100-Z30-003	SWITCH ASSY., COMBINATION	-	-	1	-	-	--------	--------	RGH
15	35111-880-013	KEY COMP.	-	-	2	-	-	--------	--------	RGH
16	37450-Z30-R71	METER ASSY., VOLT	-	-	1	-	-	--------	--------	RGH
17	38220-Z30-R61	BREAKER, CIRCUIT(24A)	-	-	1	-	-	--------	--------	RGH
18	38240-898-000	PROTECTOR, CIRCUIT(D.C.)	-	-	1	-	-	--------	--------	RGH
19	38250-ZA8-701	LENS ASSY., PROTECTOR	-	-	1	-	-	--------	--------	RGH
20	90101-Z15-000	SCREW, TRUSS, 6X18	-	-	2	-	-	--------	--------	RGH
21	90101-Z30-000	SCREW, TRUSS, 6X30	-	-	2	-	-	--------	--------	RGH
22	90111-Z22-A60	BOLT, HEX., 6X22	-	-	1	-	-	--------	--------	RGH
23	90112-Z22-000	NUT, HEX., 6MM	-	-	2	-	-	--------	--------	RGH

CONTROL PANEL(6)

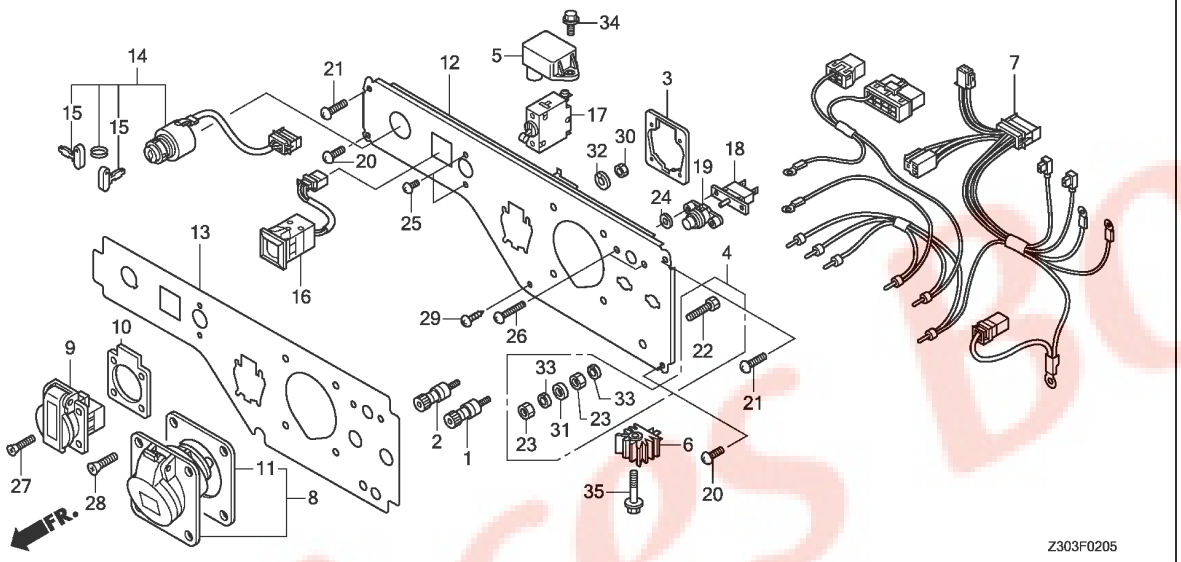

Ref. No.	Part No.	Description	Reqd. QTY EG 5500 CX	EG 6500 CX	EG 5500 CXS	EG 6500 CXS	EG 5500 CL	Serial No.		Parts catalogue code
24	90401-ZR4-F30	WASHER, 4MM	-	-	2	-	-	--------	--------	RGH
25	93500-03005-1A	SCREW, PAN, 3X5	-	-	2	-	-	--------	--------	RGH
26	93500-03016-0A	SCREW, PAN, 3X16	-	-	2	-	-	--------	--------	RGH
27	93600-04016-1G	SCREW, FLAT, 4X16	-	-	4	-	-	--------	--------	RGH
28	93600-05016-0G	SCREW, FLAT, 5X16	-	-	4	-	-	--------	--------	RGH
29	93913-15280	SCREW, TAPPING, 5X12(PO)	-	-	1	-	-	--------	--------	RGH
30	94001-05000	NUT, HEX., 5MM	-	-	4	-	-	--------	--------	RGH
31	94101-06000	WASHER, PLAIN, 6MM	-	-	1	-	-	--------	--------	RGH
32	94111-05800	WASHER, SPRING, 5MM	-	-	4	-	-	--------	--------	RGH
33	94111-06000	WASHER, SPRING, 6MM	-	-	2	-	-	--------	--------	RGH
34	96001-06012-00	BOLT, FLANGE, 6X12	-	-	1	-	-	--------	--------	RGH
35	96001-06030-00	BOLT, FLANGE, 6X30	-	-	1	-	-	--------	--------	RGH

CONTROL PANEL(7)

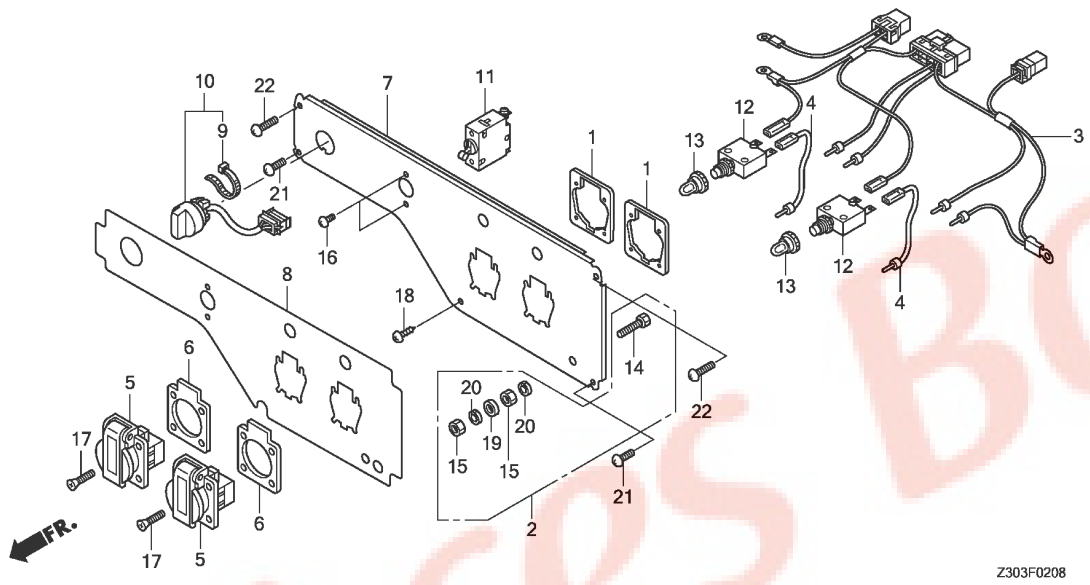

Ref. No.	L.O.N.	(Relative ref. Number) Description	F.R.T.
3	6111B9	HARNESS, CONTROL WIRE	0.9
5	6221D5	RECEPTACLE/CONSENT, CONTROL PANEL	0.7
	6221E5	RECEPTACLE/CONSENT, CONTROL PANEL :ALL	0.8
7	6221N9	PANEL, GENERATOR CONTROL	1.1
10	6151D9	SWITCH, ENGINE STOP	0.6
11	6131C4	BREAKER, CIRCUIT	0.7
12	6221D4	PROTECTOR, CIRCUIT	0.6
		.NOTE: Same time for two units	

Ref. No.	Part No.	Description	Reqd. QTY EG 5500 CX	EG 6500 CX	EG 5500 CXS	EG 6500 CXS	EG 5500 CL	Serial No.		Parts catalogue code
1	31426-Z18-000	PLATE SET, CONSENT	-	-	-	-	2	--------	--------	GT,GWT
2	31428-Z22-A60	TERMINAL SET, EARTH	-	-	-	-	1	--------	--------	GT,GWT
3	32150-Z30-C50	HARNESS ASSY., CONTROL WIRE (CL-GW)	-	-	-	-	1	--------	--------	GT,GWT
4	32221-Z28-R20	CORD, TERMINAL	-	-	-	-	2	--------	--------	GT,GWT
5	32331-Z25-A60	RECEPTACLE(16A-250V)	-	-	-	-	2	--------	--------	GT,GWT
6	32335-875-610	PACKING, RECEPTACLE	-	-	-	-	2	--------	--------	GT,GWT
7	32345-Z30-C50ZA	PANEL COMP., CONTROL(CL-GW) *NH105*...MAT BLACK (#15-#20)	-	-	-	-	1	--------	--------	GT,GWT
8	32366-Z30-C50	MARK, PANEL(CL-GW)	-	-	-	-	1	--------	--------	GT,GWT
9	32902-892-003	BAND	-	-	-	-	1	--------	--------	GT,GWT
10	35120-Z30-801	SWITCH ASSY., ENGINE STOP	-	-	-	-	1	--------	--------	GT,GWT
11	38220-Z30-R61	BREAKER, CIRCUIT(24A)	-	-	-	-	1	--------	--------	GT,GWT
12	38240-Z23-F90	PROTECTOR, CIRCUIT(16A)	-	-	-	-	2	--------	--------	GT,GWT
13	38242-Z25-A62	COVER COMP., CIRCUIT PROTECTOR	-	-	-	-	2	--------	--------	GT,GWT
14	90111-Z22-A60	BOLT, HEX., 6X22	-	-	-	-	1	--------	--------	GT,GWT
15	90112-Z22-000	NUT, HEX., 6MM	-	-	-	-	2	--------	--------	GT,GWT
16	93500-03005-1A	SCREW, PAN, 3X5	-	-	-	-	2	--------	--------	GT,GWT
17	93600-04016-1G	SCREW, FLAT, 4X16	-	-	-	-	8	--------	--------	GT,GWT
18	93913-15280	SCREW, TAPPING, 5X12(PO)	-	-	-	-	1	--------	--------	GT,GWT
19	94101-06000	WASHER, PLAIN, 6MM	-	-	-	-	1	--------	--------	GT,GWT
20	94111-06000	WASHER, SPRING, 6MM	-	-	-	-	2	--------	--------	GT,GWT
21	90101-Z15-000	SCREW, TRUSS, 6X18	-	-	-	-	2	--------	--------	GT,GWT
22	90101-Z30-000	SCREW, TRUSS, 6X30	-	-	-	-	2	--------	--------	GT,GWT

CONTROL PANEL(8)

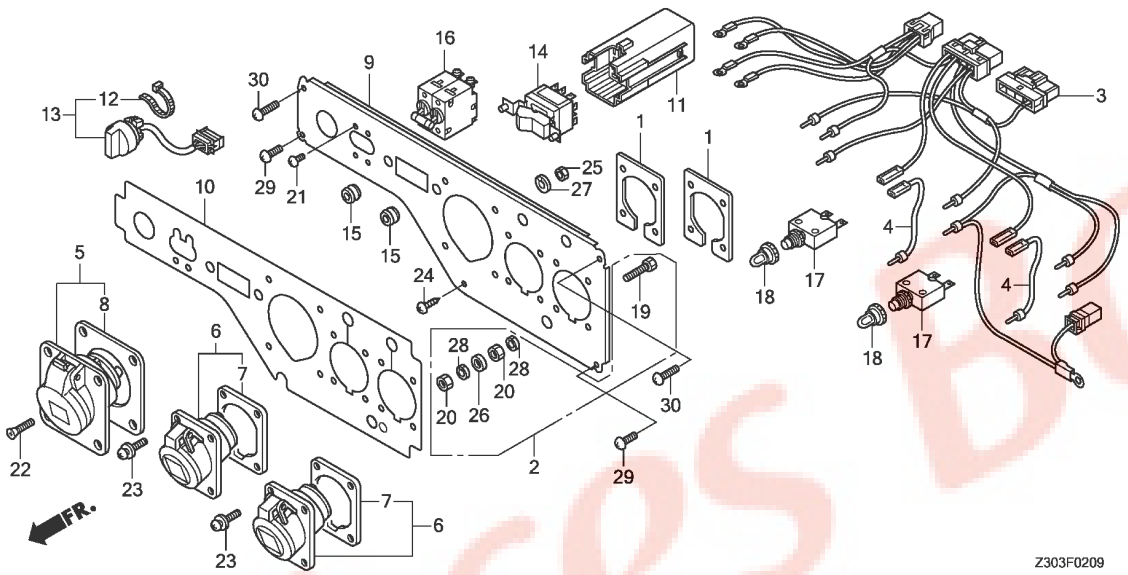

Ref. No.	L.O.N.	(Relative ref. Number) Description	F.R.T.
3	6111B9	HARNESS, CONTROL WIRE ..... (6)	0.9
5	6221D5	RECEPTACLE/CONSENT, CONTROL PANEL	0.7
	6221E5	RECEPTACLE/CONSENT, CONTROL PANEL :ALL	0.8
9	6221N9	PANEL, GENERATOR CONTROL	1.1
13	6151D9	SWITCH, ENGINE STOP	0.6
14	6151F1	SWITCH, VOLT CHANGE	0.7
16	6131C4	BREAKER, CIRCUIT	0.7
17	6221D4	PROTECTOR, CIRCUIT	0.6
		.NOTE: Same time for two units	

Ref. No.	Part No.	Description	Reqd. QTY EG 5500 CX	EG 6500 CX	EG 5500 CXS	EG 6500 CXS	EG 5500 CL	Serial No.	Parts catalogue code
1	31426-Z22-000	PLATE SET, CONSENT	-	-	-	-	2	-------- --------	BT
2	31428-Z22-A60	TERMINAL SET, EARTH	-	-	-	-	1	-------- --------	BT
3	32150-Z30-C90	HARNESS ASSY., CONTROL WIRE (CL-GW)	-	-	-	-	1	-------- --------	BT
4	32221-Z28-R20	CORD, TERMINAL	-	-	-	-	2	-------- --------	BT
5	32330-Z22-A90	RECEPTACLE(32A/250V)(KEDU) ..	-	-	-	-	1	-------- --------	BT
6	32332-ZB3-G90	RECEPTACLE(16A/110V)(LEWDEN)	-	-	-	-	2	-------- --------	BT
7	32335-898-690	PACKING, RECEPTACLE	-	-	-	-	2	-------- --------	BT
8	32335-Z22-F90	PACKING	-	-	-	-	1	-------- --------	BT
9	32345-Z30-C90ZA	PANEL COMP., CONTROL(CL-GW) *NH105*...MAT BLACK (#15-#20)	-	-	-	-	1	-------- --------	BT
10	32366-Z30-C90	MARK, PANEL(CL-GW)	-	-	-	-	1	-------- --------	BT
11	32395-Z30-S31	COUPLER(12P)	-	-	-	-	1	-------- --------	BT
12	32902-892-003	BAND	-	-	-	-	1	-------- --------	BT
13	35120-Z30-801	SWITCH ASSY., ENGINE STOP ...	-	-	-	-	1	-------- --------	BT
14	35320-Z30-B41	SWITCH ASSY., VOLT CHANGE ...	-	-	-	-	1	-------- --------	BT
15	35322-Z30-000	MOUNT, VOLT CHANGE SWITCH ...	-	-	-	-	2	-------- --------	BT
16	38220-Z30-C91	BREAKER, CIRCUIT(24A)	-	-	-	-	1	-------- --------	BT
17	38240-Z23-F90	PROTECTOR, CIRCUIT(16A)	-	-	-	-	2	-------- --------	BT
18	38242-Z25-A62	COVER COMP., CIRCUIT PROTECTOR	-	-	-	-	2	-------- --------	BT
19	90111-Z22-A60	BOLT, HEX., 6X22	-	-	-	-	1	-------- --------	BT
20	90112-Z22-000	NUT, HEX., 6MM	-	-	-	-	2	-------- --------	BT
21	93500-03005-1A	SCREW, PAN, 3X5	-	-	-	-	4	-------- --------	BT
22	93600-05016-0G	SCREW, FLAT, 5X16	-	-	-	-	4	-------- --------	BT
23	93893-05016-17	SCREW-WASHER, 5X16	-	-	-	-	8	-------- --------	BT

CONTROL PANEL(8)

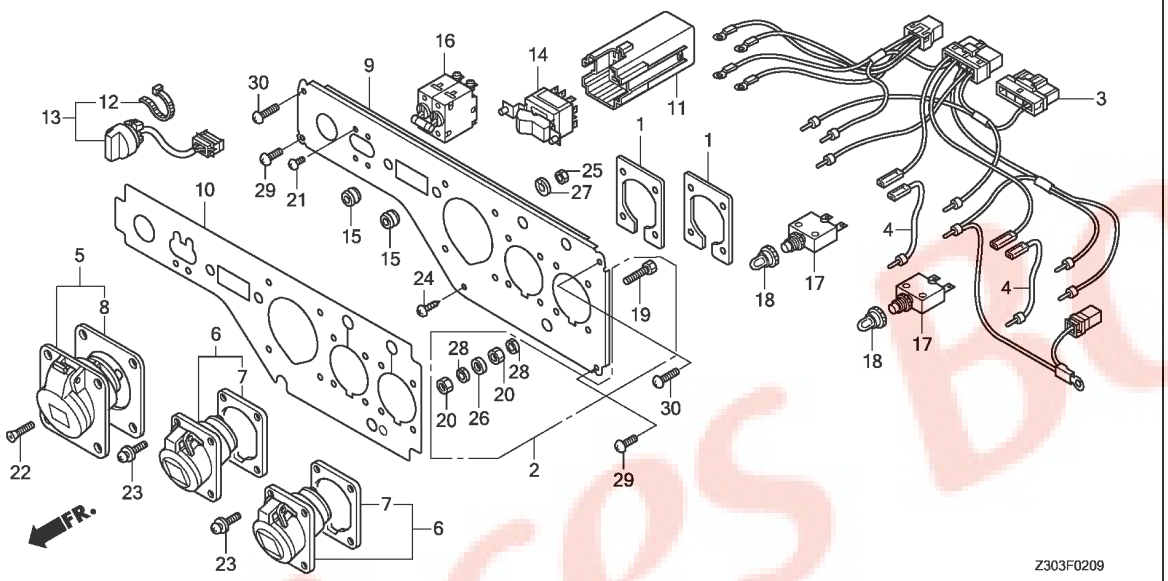

Ref. No.	Part No.	Description	Reqd. QTY EG 5500 CX	EG 6500 CX	EG 5500 CXS	EG 6500 CXS	EG 5500 CL	Serial No.		Parts catalogue code
24	93913-15280	SCREW, TAPPING, 5X12(PO) ----	-	-	-	-	1	--------	--------	BT
25	94001-05000	NUT, HEX., 5MM ----------	-	-	-	-	4	--------	--------	BT
26	94101-06000	WASHER, PLAIN, 6MM ----------	-	-	-	-	1	--------	--------	BT
27	94111-05800	WASHER, SPRING, 5MM ---------	-	-	-	-	4	--------	--------	BT
28	94111-06000	WASHER, SPRING, 6MM ---------	-	-	-	-	2	--------	--------	BT
29	90101-Z15-000	SCREW, TRUSS, 6X18 ----------	-	-	-	-	2	--------	--------	BT
30	90101-Z30-000	SCREW, TRUSS, 6X30 ----------	-	-	-	-	2	--------	--------	BT

CONTROL PANEL(9)

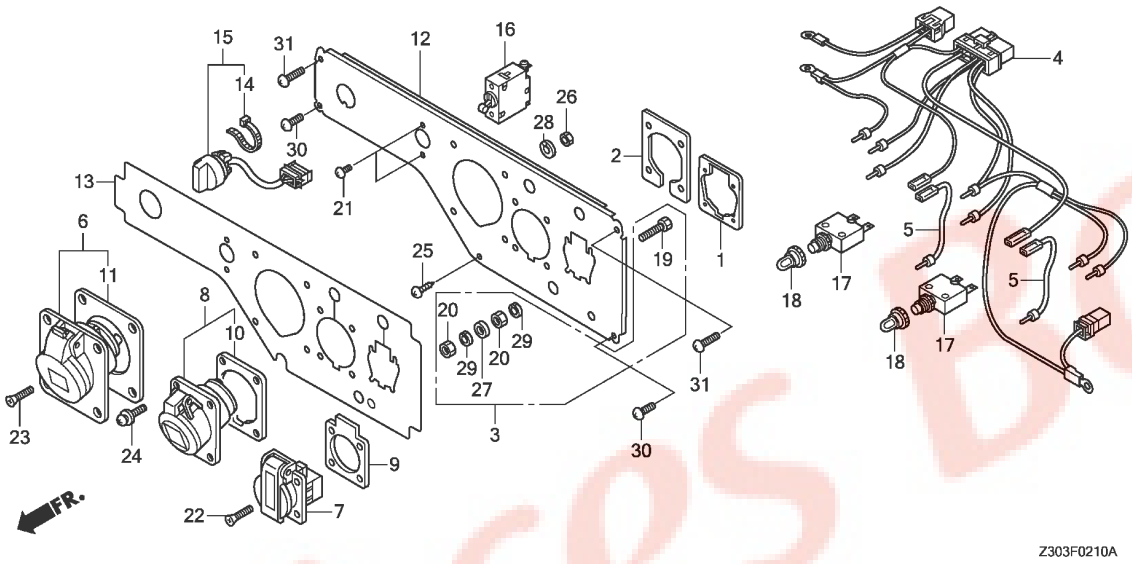

Ref. No.	L.O.N.	(Relative ref. Number) Description	F.R.T.
4	6111B9	HARNESS, CONTROL WIRE	0.9
6		(7,8)	
	6221D5	RECEPTACLE/CONSENT, CONTROL PANEL	0.7
	6221E5	RECEPTACLE/CONSENT, CONTROL PANEL :ALL	0.8
12	6221N9	PANEL, GENERATOR CONTROL	1.1
15	6151D9	SWITCH, ENGINE STOP	0.6
16	6131C4	BREAKER, CIRCUIT	0.7
17	6221D4	PROTECTOR, CIRCUIT	0.6
		.NOTE: Same time for two units	

Ref. No.	Part No.	Description	Reqd. QTY EG 5500 CX	EG 6500 CX	EG 5500 CXS	EG 6500 CXS	EG 5500 CL	Serial No.	Parts catalogue code
1	31426-Z18-000	PLATE SET, CONSENT	-	-	-	-	1	-------- --------	FT
2	31426-Z22-000	PLATE SET, CONSENT	-	-	-	-	1	-------- --------	FT
3	31428-Z22-A60	TERMINAL SET, EARTH	-	-	-	-	1	-------- --------	FT
4	32150-Z30-D50	HARNESS ASSY., CONTROL WIRE (CL-F)	-	-	-	-	1	-------- --------	FT
5	32221-Z28-R20	CORD, TERMINAL	-	-	-	-	2	-------- --------	FT
6	32330-Z22-A90	RECEPTACLE(32A/250V)(KEDU) ..	-	-	-	-	1	-------- --------	FT
7	32331-Z25-B50	RECEPTACLE(10/16A-250V)	-	-	-	-	1	-------- --------	FT
8	32331-ZB3-G90	RECEPTACLE(16A/240V)	-	-	-	-	1	-------- --------	FT
9	32335-875-610	PACKING, RECEPTACLE	-	-	-	-	1	-------- --------	FT
10	32335-898-690	PACKING, RECEPTACLE	-	-	-	-	1	-------- --------	FT
11	32335-Z22-F90	PACKING	-	-	-	-	1	-------- --------	FT
12	32345-Z30-D50ZA	PANEL COMP., CONTROL(CL-F) *NH105*...MAT BLACK (#15-#20)	-	-	-	-	1	-------- --------	FT
13	32366-Z30-D50	MARK, PANEL(CL-F)	-	-	-	-	1	-------- --------	FT
14	32902-892-003	BAND	-	-	-	-	1	-------- --------	FT
15	35120-Z30-801	SWITCH ASSY., ENGINE STOP ...	-	-	-	-	1	-------- --------	FT
16	38220-Z30-R61	BREAKER, CIRCUIT(24A)	-	-	-	-	1	-------- --------	FT
17	38240-Z23-F90	PROTECTOR, CIRCUIT(16A)	-	-	-	-	2	-------- --------	FT
18	38242-Z25-A62	COVER COMP., CIRCUIT PROTECTOR	-	-	-	-	2	-------- --------	FT
19	90111-Z22-A60	BOLT, HEX., 6X22	-	-	-	-	1	-------- --------	FT
20	90112-Z22-000	NUT, HEX., 6MM	-	-	-	-	2	-------- --------	FT
21	93500-03005-1A	SCREW, PAN, 3X5	-	-	-	-	2	-------- --------	FT
22	93600-04016-1G	SCREW, FLAT, 4X16	-	-	-	-	4	-------- --------	FT
23	93600-05016-0G	SCREW, FLAT, 5X16	-	-	-	-	4	-------- --------	FT

CONTROL PANEL(9)

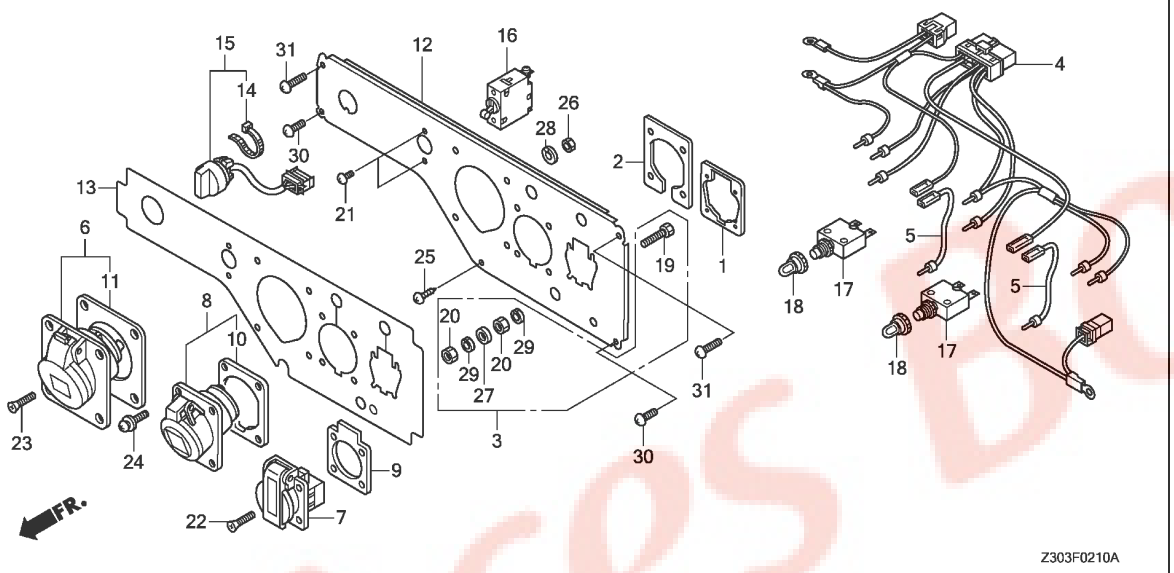

Ref. No.	Part No.	Description	Reqd. QTY EG 5500 CX	EG 6500 CX	EG 5500 CXS	EG 6500 CXS	EG 5500 CL	Serial No.	Parts catalogue code
24	93893-05016-17	SCREW-WASHER, 5X16	-	-	-	-	4	-------- --------	FT
25	93913-15280	SCREW, TAPPING, 5X12(PO)	-	-	-	-	1	-------- --------	FT
26	94001-05000	NUT, HEX., 5MM	-	-	-	-	4	-------- --------	FT
27	94101-06000	WASHER, PLAIN, 6MM	-	-	-	-	1	-------- --------	FT
28	94111-05800	WASHER, SPRING, 5MM	-	-	-	-	4	-------- --------	FT
29	94111-06000	WASHER, SPRING, 6MM	-	-	-	-	2	-------- --------	FT
30	90101-Z15-000	SCREW, TRUSS, 6X18	-	-	-	-	2	-------- --------	FT
31	90101-Z30-000	SCREW, TRUSS, 6X30	-	-	-	-	2	-------- --------	FT

F-2-11 CONTROL PANEL(10)

G 2

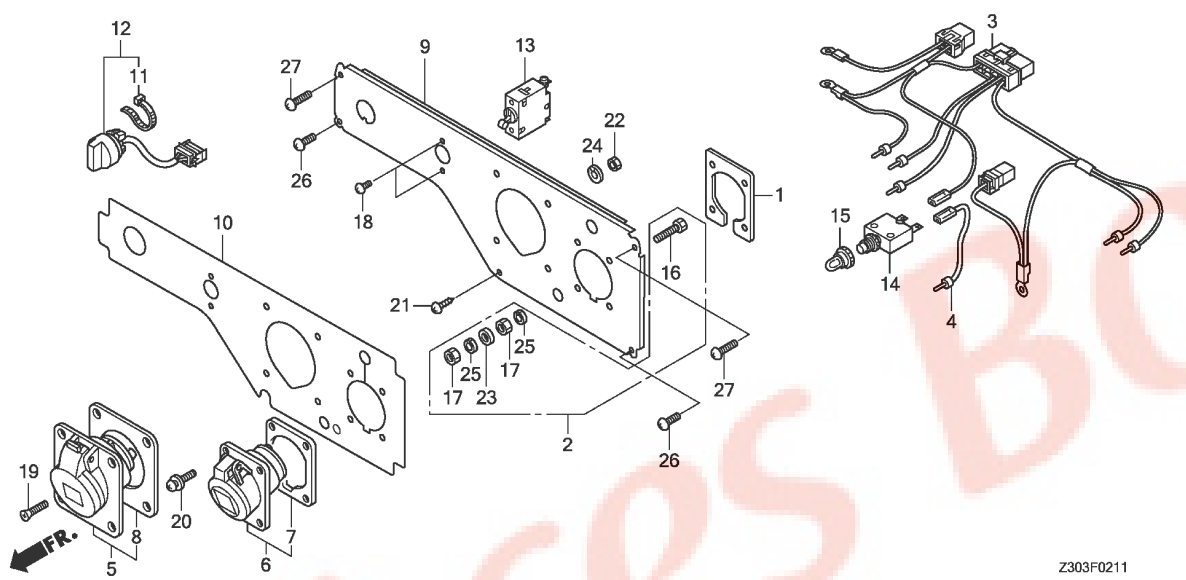

Ref. No.	L.O.N.	(Relative ref. Number) Description	F.R.T.
3	6111B9	HARNESS, CONTROL WIRE ·····	0.9
5		(6)	
	6221D5	RECEPTACLE/CONSENT, CONTROL PANEL ·····	0.7
	6221E5	RECEPTACLE/CONSENT, CONTROL PANEL :ALL ·····	0.8
9	6221N9	PANEL, GENERATOR CONTROL ·····	1.1
12	6151D9	SWITCH, ENGINE STOP ·····	0.6
13	6131C4	BREAKER, CIRCUIT ·····	0.7
14	6221D4	PROTECTOR, CIRCUIT ·····	0.6

Ref. No.	Part No.	Description	Reqd. QTY EG 5500 CX	EG 6500 CX	EG 5500 CXS	EG 6500 CXS	EG 5500 CL	Serial No.	Parts catalogue code
1	31426-Z22-000	PLATE SET, CONSENT ·····	-	-	-	-	1	-------- --------	ITT
2	31428-Z22-A60	TERMINAL SET, EARTH ·····	-	-	-	-	1	-------- --------	ITT
3	32150-Z30-S20	HARNESS ASSY., CONTROL WIRE (CL-IT)	-	-	-	-	1	-------- --------	ITT
4	32221-Z28-R20	CORD, TERMINAL ·····	-	-	-	-	1	-------- --------	ITT
5	32330-Z22-A90	RECEPTACLE(32A/250V)(KEDU) ··	-	-	-	-	1	-------- --------	ITT
6	32331-ZB3-G90	RECEPTACLE(16A/240V) ·····	-	-	-	-	1	-------- --------	ITT
7	32335-898-690	PACKING, RECEPTACLE ·····	-	-	-	-	1	-------- --------	ITT
8	32335-Z22-F90	PACKING ·····	-	-	-	-	1	-------- --------	ITT
9	32345-Z30-S20ZA	PANEL COMP., CONTROL(CL-IT) *NH105*...MAT BLACK (#15-#20)	-	-	-	-	1	-------- --------	ITT
10	32366-Z30-S20	MARK, PANEL(CL-IT) ·····	-	-	-	-	1	-------- --------	ITT
11	32902-892-003	BAND ·····	-	-	-	-	1	-------- --------	ITT
12	35120-Z30-801	SWITCH ASSY., ENGINE STOP ···	-	-	-	-	1	-------- --------	ITT
13	38220-Z30-R61	BREAKER, CIRCUIT(24A) ·····	-	-	-	-	1	-------- --------	ITT
14	38240-Z23-F90	PROTECTOR, CIRCUIT(16A) ·····	-	-	-	-	1	-------- --------	ITT
15	38242-Z25-A62	COVER COMP., CIRCUIT PROTECTOR	-	-	-	-	1	-------- --------	ITT
16	90111-Z22-A60	BOLT, HEX., 6X22 ·····	-	-	-	-	1	-------- --------	ITT
17	90112-Z22-000	NUT, HEX., 6MM ·····	-	-	-	-	2	-------- --------	ITT
18	93500-03005-1A	SCREW, PAN, 3X5 ·····	-	-	-	-	2	-------- --------	ITT
19	93600-05016-0G	SCREW, FLAT, 5X16 ·····	-	-	-	-	4	-------- --------	ITT
20	93893-05016-17	SCREW-WASHER, 5X16 ·····	-	-	-	-	4	-------- --------	ITT
21	93913-15280	SCREW, TAPPING, 5X12(PO) ····	-	-	-	-	1	-------- --------	ITT
22	94001-05000	NUT, HEX., 5MM ·····	-	-	-	-	4	-------- --------	ITT
23	94101-06000	WASHER, PLAIN, 6MM ·····	-	-	-	-	1	-------- --------	ITT

3

CONTROL PANEL(10)

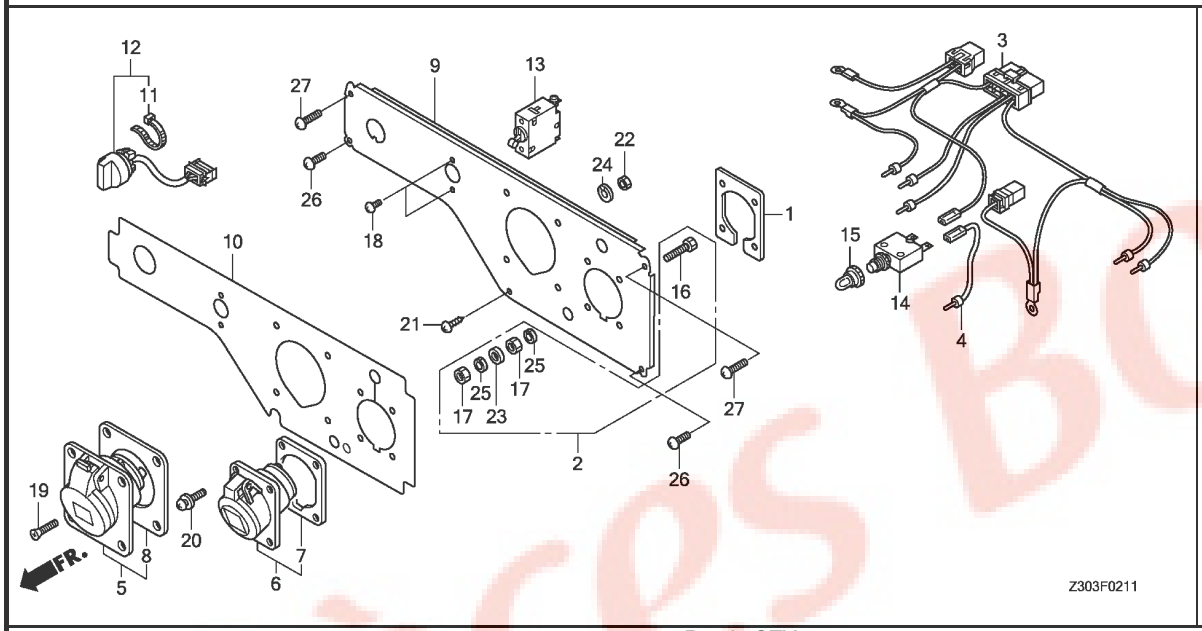

Ref. No.	Part No.	Description	Reqd. QTY EG 5500 CX	EG 6500 CX	EG 5500 CXS	EG 6500 CXS	EG 5500 CL	Serial No.		Parts catalogue code
24	94111-05800	WASHER, SPRING, 5MM	-	-	-	-	4	--------	--------	ITT
25	94111-06000	WASHER, SPRING, 6MM	-	-	-	-	2	--------	--------	ITT
26	90101-Z15-000	SCREW, TRUSS, 6X18	-	-	-	-	2	--------	--------	ITT
27	90101-Z30-000	SCREW, TRUSS, 6X30	-	-	-	-	2	--------	--------	ITT

A.V.R. UNIT

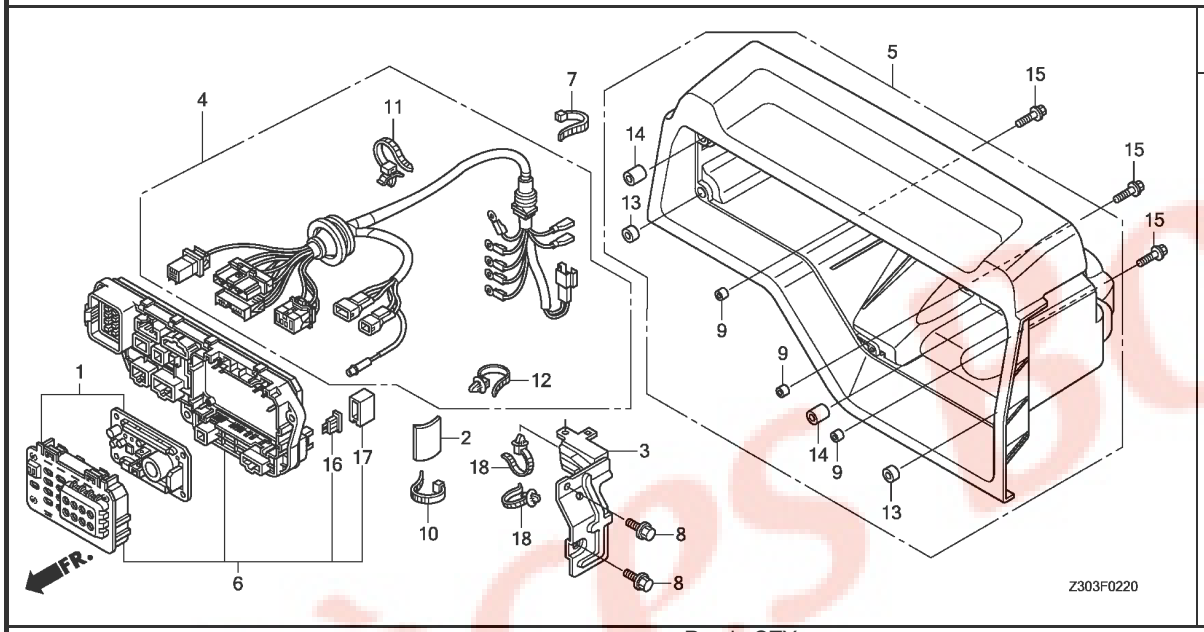

Ref. No.	L.O.N.	(Relative ref. Number) Description	F.R.T.
1	6201F9	COVER, AUTOMATIC VOLTAGE REGULATOR	0.9
4	6201B8	HARNESS, GENERATOR WIRE	0.6
5	4131M5	CASE, CONTROL	0.6
6	8121D7	BOX, JUNCTION	0.9
16		(17)	
	8121A7	FUSE, BLADE	0.1

Ref. No.	Part No.	Description	Reqd. QTY EG 5500 CX	EG 6500 CX	EG 5500 CXS	EG 6500 CXS	EG 5500 CL	Serial No.		Parts catalogue code
1	31720-Z30-D40	COVER ASSY., AUTOMATIC VOLTAGE REGULATOR	1	1	1	1	-	--------	--------	LDH,LTH,UH
	31720-Z30-D60	.....	-	1	-	1	-	--------	--------	KH,MH,RH,SH,SKH
	31720-Z30-R70	.....	-	-	1	-	-	--------	--------	RGH
	31720-Z30-C50	.....	-	-	-	-	1			
2	32106-Z30-000	SHEET, HARNESS	-	-	1	1	-			
3	32108-Z30-D60	BASE COMP., HARNESS CLIP	1	1	1	1	-			
	32108-Z30-S30	BASE, HARNESS CLIP	-	-	-	-	1			
4	32158-Z30-D60	HARNESS ASSY., GENERATOR WIRE	1	1	-	-	-	--------	--------	KH,MH,RH,SH,SKH,UH
	32158-Z30-D40	.....	-	1	-	-	-	--------	--------	LDH,LTH
	32158-Z30-B60	.....	-	-	1	1	-	--------	--------	KH,MH,RGH,RH,SH,SKH,UH
	32158-Z30-B40	.....	-	-	-	1	-	--------	--------	LDH,LTH
	32158-Z30-S30	.....	-	-	-	-	1	--------	--------	BT
	32158-Z30-C50	.....	-	-	-	-	1	--------	--------	FT,GT,GWT,ITT
5	32356-Z30-000ZA	CASE, CONTROL PANEL *NH314*.....CONDUCT GRAY	1	1	1	1	1			
6	32370-Z30-D61	BOX ASSY., JUNCTION	1	1	1	1	1	--------	--------	FT,GT,GWT,ITT,KH,MH,RGH,RH,SH,SKH,UH
	32370-Z30-S31	.....	-	1	-	1	-	--------	--------	LDH,LTH
	32370-Z30-C91	BOX ASSY., JUNCTION(B)	-	-	-	-	1	--------	--------	BT
7	32903-Z22-000	TIE, CABLE(C)	1	1	1	1	1			
8	90013-883-000	BOLT, FLANGE, 6X12(CT200) ...	2	2	2	2	2			
9	90312-GFM-970	COLLAR, BODY COVER	3	3	3	3	3			
10	90650-KV6-003	BAND, WIRE, 95MM	-	-	1	1	-			
11	90672-Z22-003	CABLE, STRAP	1	1	1	1	1			
12	91541-S0A-003	CLIP, HARNESS BAND(BLACK) (145MM)	1	1	1	1	1			
13	91551-Z15-000	COLLAR, CONTROL CASE	2	2	2	2	2			

A.V.R. UNIT

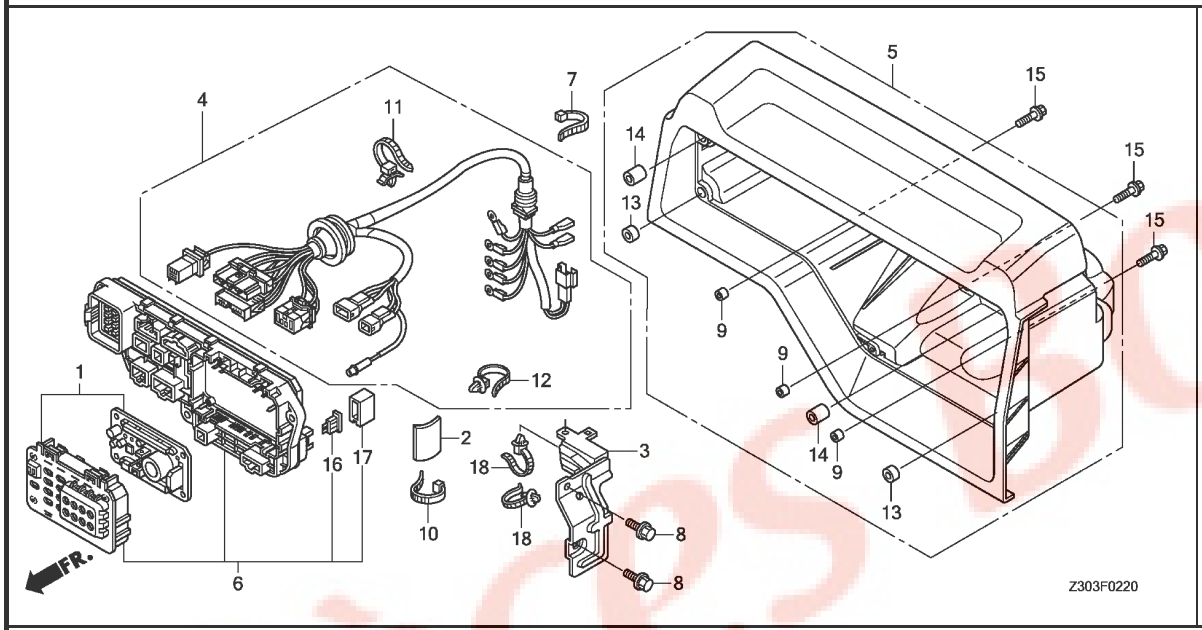

Ref. No.	Part No.	Description	Reqd. QTY EG 5500 CX	EG 6500 CX	EG 5500 CXS	EG 6500 CXS	EG 5500 CL	Serial No.	Parts catalogue code
14	91551-Z30-000	COLLAR, CONTROL CASE	2	2	2	2	2		
15	96001-06020-00	BOLT, FLANGE, 6X20	3	3	3	3	-		
	95701-06020-00		-	-	-	-	3		
16	98200-31000	FUSE, BLADE(10A)	1	1	1	1	1	-------- --------	FT,GT,GWT,ITT,KH,LDH,LTH,MH,RGH,RH,SH,SKH,UH
17	32371-Z30-D61	COVER, FUSE	1	1	1	1	1		
18	91541-S0A-003	CLIP, HARNESS BAND(BLACK) (145MM)	2	2	2	2	-		

AIR CLEANER

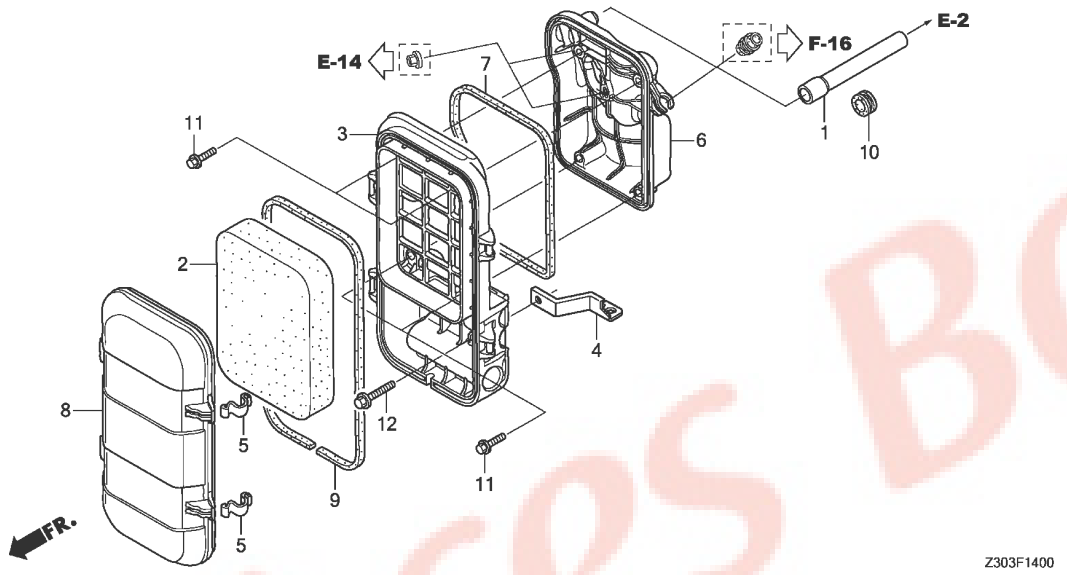

Ref. No.	L.O.N.	(Relative ref. Number) Description	F.R.T.
1	1111K5	TUBE, BREATHER	0.2
2	3121B8	ELEMENT, AIR CLEANER .INCLUDES: Air cleaner element -inspection	0.1
3	3121A5	CASE, AIR CLEANER	0.2
6	3121Q0	BASE, AIR CLEANER	0.2
7	3121E8	SEAL, AIR CLEANER CASE	0.2
9	3121E9	SEAL, AIR CLEANER COVER	0.1

Ref. No.	Part No.	Description	Reqd. QTY EG 5500 CX	EG 6500 CX	EG 5500 CXS	EG 6500 CXS	EG 5500 CL	Serial No.	Parts catalogue code
1	15721-Z23-H60	TUBE, BREATHER	1	1	1	1	1		
2	17211-899-000	ELEMENT, AIR CLEANER	1	1	1	1	1		
3	17220-Z23-H60	CASE COMP., AIR CLEANER	1	1	1	1	-		
	17220-Z30-000		-	-	-	-	1		
4	17222-Z23-H60	STAY, AIR CLEANER	1	1	1	1	1		
5	17223-Z23-000	SPRING, AIR CLEANER CASE LID	2	2	2	2	2		
6	17223-Z23-H60	BASE COMP., AIR CLEANER	1	1	1	1	1		
7	17229-Z23-H60	SEAL, AIR CLEANER CASE	1	1	1	1	1		
8	17231-Z23-H60	COVER, AIR CLEANER	1	1	1	1	1		
9	17233-Z23-H60	SEAL, AIR CLEANER COVER	1	1	1	1	1		
10	88911-MJ3-000	GROMMET, FENDER	1	1	1	1	-		
11	90005-ZM3-000	BOLT, FLANGE, 5X18	4	4	4	4	4		
12	95701-06032-08	BOLT, FLANGE, 6X32	1	1	1	1	1		

MUFFLER(1)

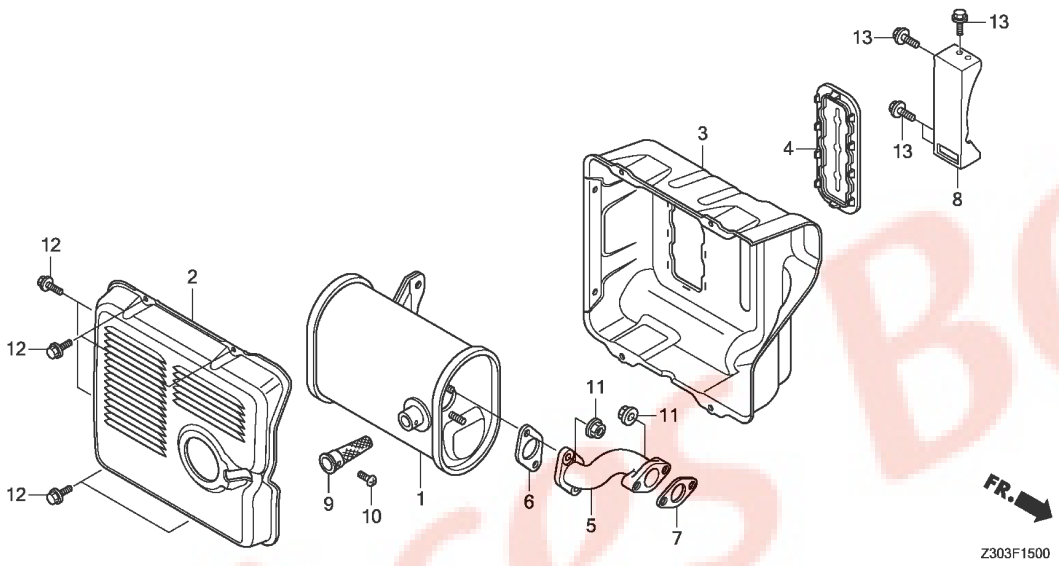

Ref. No.	L.O.N.	(Relative ref. Number) Description	F.R.T.
1	3131C5	MUFFLER, EXHAUST	0.2
2	3131D9	PROTECTOR, EXHAUST MUFFLER :OUTER	0.1
3	3131D8	PROTECTOR, EXHAUST MUFFLER :INNER	0.3
4	3131G6	SEAL, MUFFLER PROTECTOR	0.3
5	3131C9	PIPE, EXHAUST	0.3
6	3131B5	GASKET, EXHAUST PIPE	0.2
7	3131H9	GASKET, EXHAUST PIPE(A)	0.3
9	3131A1	ARRESTER, SPARK .INCLUDES: Spark arrester check	0.1

Ref. No.	Part No.	Description	Reqd. QTY EG 5500 CX	EG 6500 CX	EG 5500 CXS	EG 6500 CXS	EG 5500 CL	Serial No.	Parts catalogue code
1	18310-Z30-D61	MUFFLER COMP.	1	1	1	1	-		
2	18320-Z22-000ZA	PROTECTOR COMP., MUFFLER OUTER *NH105*...MAT BLACK (#15-#20)	1	1	1	1	-		
3	18326-Z30-D60ZA	PROTECTOR, MUFFLER INNER *NH105*...MAT BLACK (#15-#20)	1	1	1	1	-		
4	18329-Z22-000	SEAL, MUFFLER PROTECTOR	1	1	1	1	-		
5	18331-Z22-000	PIPE, EX.	1	1	1	1	-		
6	18333-ZB4-801	GASKET, EX. PIPE	1	1	1	1	-		
7	18333-ZE3-801	GASKET, EX. PIPE	1	1	1	1	-		
8	18338-Z30-D60	STAY COMP., MUFFLER	1	1	1	1	-		
9	18355-Z22-E30	ARRESTER, SPARK	1	-	1	-	-	-------- --------	UH
10	90002-ZE2-U91	SCREW, TAPPING, 4X8	1	-	1	-	-	-------- --------	UH
11	94050-08000	NUT, FLANGE, 8MM	4	4	4	4	-		
12	95701-06010-07	BOLT, FLANGE, 6X10	6	6	6	6	-		
13	95701-08016-00	BOLT, FLANGE, 8X16	4	4	4	4	-		

F-15-1 MUFFLER(2)

G 8

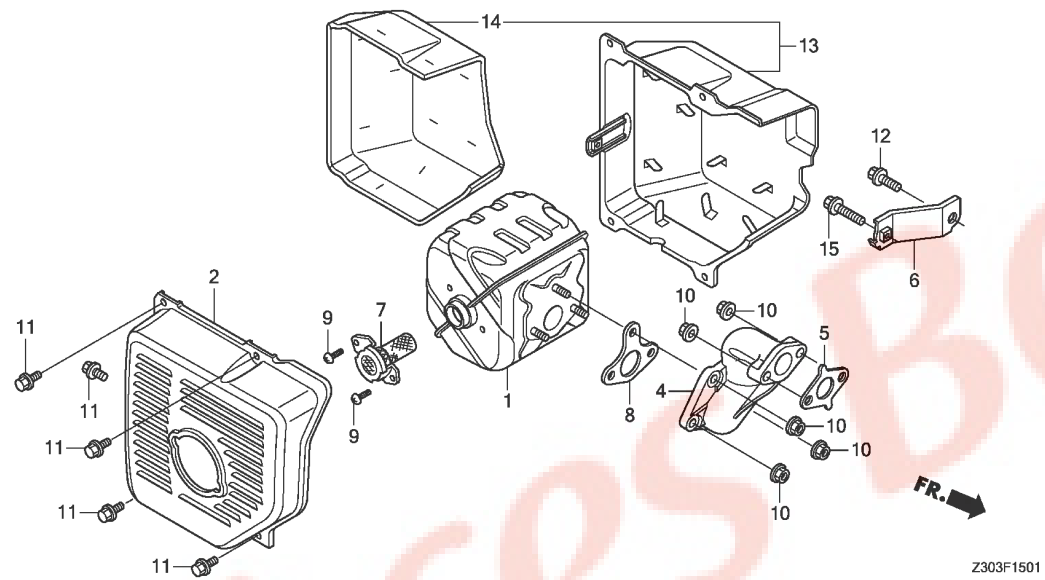

Ref. No.	L.O.N.	(Relative ref. Number) Description	F.R.T.
1	3131C5	MUFFLER, EXHAUST	0.2
2	3131D9	PROTECTOR, EXHAUST MUFFLER :OUTER	0.1
4	3131C9	PIPE, EXHAUST	0.2
5	3131H9	GASKET, EXHAUST PIPE(A)	0.2
7	3131A1	ARRESTER, SPARK .INCLUDES: Spark arrester check	0.1
8	3131B5	GASKET, EXHAUST PIPE	0.1
13	3131D8	PROTECTOR, EXHAUST MUFFLER :INNER	0.1

Ref. No.	Part No.	Description	Reqd. QTY EG 5500 CX	EG 6500 CX	EG 5500 CXS	EG 6500 CXS	EG 5500 CL	Serial No.	Parts catalogue code
1	18310-Z1C-E20	MUFFLER COMP.	-	-	-	-	1		
2	18320-Z30-S30ZA	PROTECTOR COMP., MUFFLER OUTER *NH105*...MAT BLACK (#15-#20)	-	-	-	-	1		
4	18331-Z30-000	PIPE, EX.	-	-	-	-	1		
5	18333-ZF6-W01	GASKET, EX. PIPE	-	-	-	-	1		
6	18338-Z30-000	STAY, MUFFLER	-	-	-	-	1		
7	18350-Z5T-800	ARRESTER COMP., SPARK	-	-	-	-	1		
8	18381-ZE2-801	GASKET, MUFFLER (NIPPON LEAKLESS)	-	-	-	-	1		
9	90050-ZE1-000	SCREW, TAPPING, 5X8	-	-	-	-	2		
10	94050-08000	NUT, FLANGE, 8MM	-	-	-	-	5		
11	95701-06010-07	BOLT, FLANGE, 6X10	-	-	-	-	5		
12	95701-08016-00	BOLT, FLANGE, 8X16	-	-	-	-	1		
13	18324-Z30-C90ZA	PROTECTOR ASSY., MUFFLER INNER *NH105*...MAT BLACK (#15-#20)	-	-	-	-	1		
14	18376-Z30-C90	INSULATOR, MUFFLER PROTECTOR	-	-	-	-	1		
15	95701-08022-00	BOLT, FLANGE, 8X22	-	-	-	-	1		

3

FUEL TANK

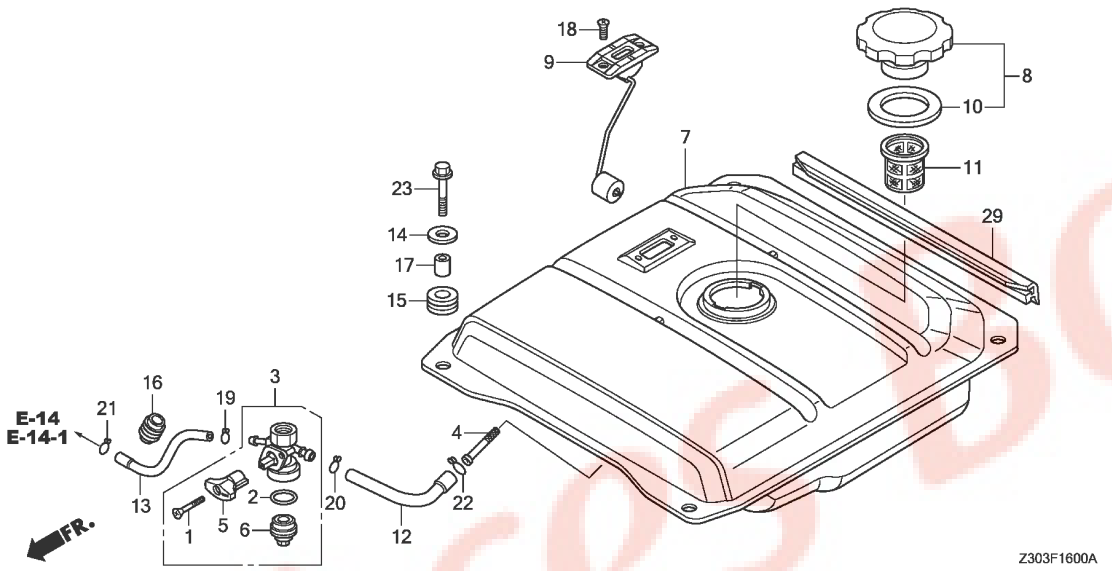

Ref. No.	L.O.N.	(Relative ref. Number) Description	F.R.T.
3	3101A3	COCK, FUEL	0.2
4	3101H8	STRAINER, FUEL	0.6
6		(2)	
	3101F4	CUP, FUEL STRAINER	0.1
7	3101H7	TANK, FUEL	0.8
9	6171A1	METER/GAUGE UNIT, FUEL	0.1
11	3101A6	FILTER, FUEL	0.1
12	3101F1	TUBE, FUEL TANK	0.6
13	3101F6	TUBE, FUEL	0.2

Ref. No.	Part No.	Description	Reqd. QTY EG 5500 CX	EG 6500 CX	EG 5500 CXS	EG 6500 CXS	EG 5500 CL	Serial No.	Parts catalogue code
1	16080-Z30-003	SCREW, OVAL	1	1	1	1	1		
2	16173-001-004	PACKING, FUEL STRAINER CUP	1	1	1	1	1		
3	16950-Z30-003	COCK ASSY., FUEL	1	1	1	1	1		
4	16952-ZA0-000	STRAINER, FUEL	1	1	1	1	1		
5	16963-Z30-003	LEVER, COCK	1	1	1	1	1		
6	16967-GA6-671	CUP, FUEL STRAINER	1	1	1	1	1		
7	17510-Z30-000ZA	TANK COMP., FUEL *R280*.....POWER RED	1	1	1	1	1		
8	17620-Z22-000	CAP COMP., FUEL FILLER	1	1	1	1	1		
9	17630-Z30-000	METER ASSY., FUEL	1	1	1	1	1		
10	17631-899-000	PACKING, FUEL FILLER CAP	1	1	1	1	1		
11	17670-ZT5-640	FILTER COMP., FUEL	1	1	1	1	1		
12	17701-Z30-D60	TUBE, FUEL TANK	1	1	1	1	1		
13	17702-Z30-D60	TUBE, FUEL	1	1	1	1	1		
14	90501-Z15-000	WASHER, 6MM	4	4	4	4	4		
15	90851-898-000	RUBBER, TANK CUSHION	4	4	4	4	4		
16	90854-ZB3-000	RUBBER, FUEL(9X15X20)	1	1	1	1	1		
17	91551-898-000	COLLAR, TANK CUSHION	4	4	4	4	4		
18	93600-05010-0A	SCREW, FLAT, 5X10	2	2	2	2	2		
19	95002-02080	CLIP, TUBE(B8)	1	1	1	1	1		
20	95002-02100	CLIP, TUBE(B10)	1	1	1	1	1		
21	95002-50000	CLIP, TUBE(C9)	1	1	1	1	1		
22	95002-80000	CLIP, TUBE(C12)	1	1	1	1	1		
23	95701-06022-07	BOLT, FLANGE, 6X22	4	4	4	4	4		
29	17537-Z30-C90	SEAL, FUEL TANK	-	-	-	-	1		

FRAME

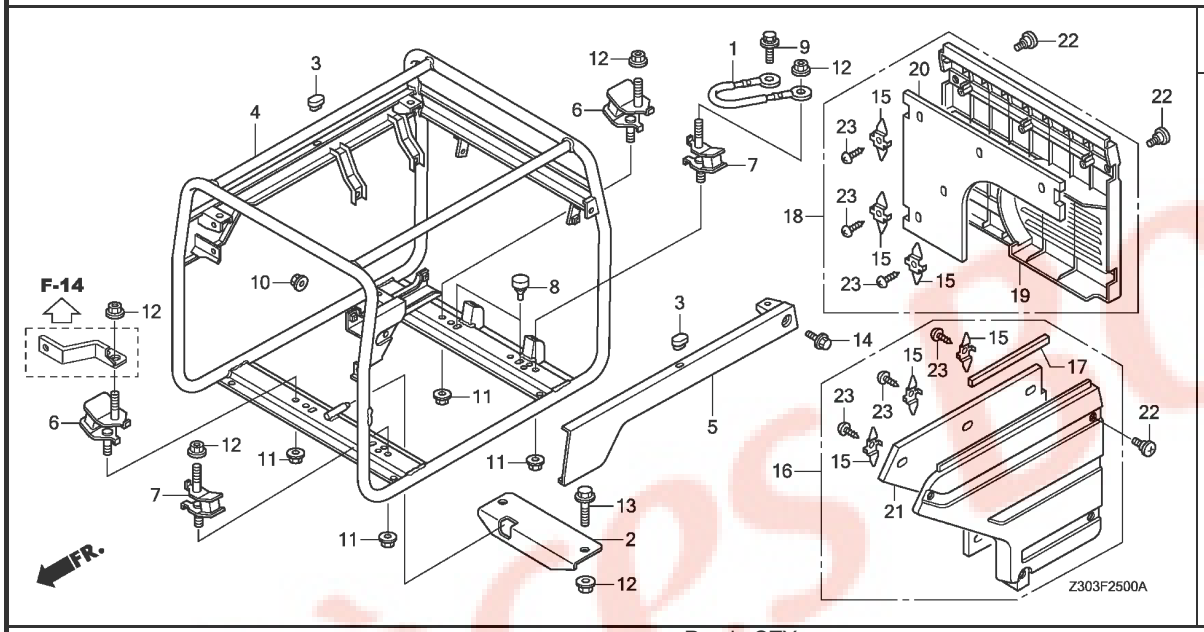

Ref. No.	L.O.N.	(Relative ref. Number) Description	F.R.T.
4	4101H6	FRAME, MAIN	1.3
		.INCLUDES: Engine removal and installation	
	4101H6A	.With starter motor add	0.1
5	4101J5	FRAME, SIDE :LEFT	0.1
6	4101V1	RUBBER, BOTTOM :RIGHT FRONT ..	1.2
		.INCLUDES: Engine removal and installation	
	4101V4	RUBBER, BOTTOM :RIGHT REAR ...	1.2
		.INCLUDES: Engine removal and installation	
	4101EE	RUBBER, BOTTOM :FOR 1 PRODUCT	1.3
		.INCLUDES: Engine removal and installation	
7	4101V0	RUBBER, BOTTOM :LEFT FRONT ...	1.2
		.INCLUDES: Engine removal and installation	
	4101V3	RUBBER, BOTTOM :LEFT REAR	1.2
		.INCLUDES: Engine removal and installation	
	4101EE	RUBBER, BOTTOM :FOR 1 PRODUCT	1.3
		.INCLUDES: Engine removal and installation	
16	4141R0	PANEL, GENERATOR :LEFT	0.1
18	4141Q8	PANEL, GENERATOR :REAR	0.1

Ref. No.	Part No.	Description	Reqd. QTY EG 5500 CX	EG 6500 CX	EG 5500 CXS	EG 6500 CXS	EG 5500 CL	Serial No.	Parts catalogue code
1	32610-ZD1-A40	CABLE COMP., SUB EARTH	1	-	1	-	-	-------- --------	UH
	32610-899-000	CABLE, EARTH	-	-	-	-	1		
2	50138-Z18-000	BRACKET, STOPPER	1	1	1	1	1		
3	50153-ZR6-000	RUBBER, FUEL TANK MOUNTING ..	2	2	2	2	2		
4	50310-Z30-D60ZA	FRAME COMP.(CX)							
		NH105...MAT BLACK (#15-#20)	1	1	-	-	-		
	50310-Z30-B60ZA	FRAME COMP.(CXS)							
		NH105...MAT BLACK (#15-#20)	-	-	1	1	-		
	50310-Z30-C90ZA	FRAME COMP.(CL)							
		NH105...MAT BLACK (#15-#20)	-	-	-	-	1		
5	50315-Z30-000ZA	FRAME COMP., R. SIDE							
		NH105...MAT BLACK (#15-#20)	1	1	1	1	-		
	50315-Z30-C90ZA	*NH105*...MAT BLACK (#15-#20)	-	-	-	-	1		
6	68325-Z22-E30	RUBBER, BOTTOM	2	2	2	2	2		
7	68325-Z23-E30	RUBBER, BOTTOM	2	2	2	2	2		
8	68331-Z18-000	RUBBER, BUMP STOPPER	2	2	2	2	2		
9	90148-SE0-003	BOLT, EARTH, 6X16							
		(WASHER 12.5MM)(ZN)	1	-	1	-	1	-------- --------	BT,FT,GT,GWT,ITT,UH
10	94050-06000	NUT, FLANGE, 6MM	1	1	1	1	1		
11	94050-08000	NUT, FLANGE, 8MM	4	4	4	4	4		
12	94050-10000	NUT, FLANGE, 10MM	6	6	6	6	6		
13	95701-10040-00	BOLT, FLANGE, 10X40	2	2	2	2	2		
14	95701-06012-07	BOLT, FLANGE, 6X12	1	1	1	1	1		
15	19656-Z25-R50	CLIP, INSULATOR	-	-	-	-	12		
16	63250-Z30-C90ZA	PANEL ASSY., R. SIDE							
		NH314.....CONDUCT GRAY	-	-	-	-	1		

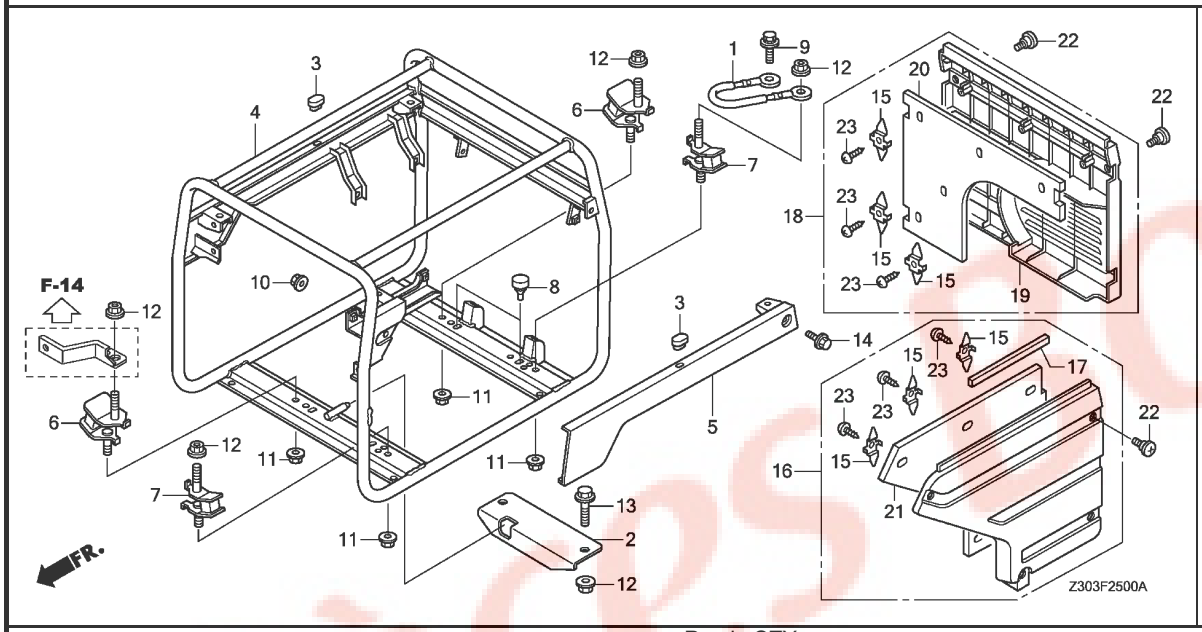

Ref. No.	Part No.	Description	Reqd. QTY EG 5500 CX	EG 6500 CX	EG 5500 CXS	EG 6500 CXS	EG 5500 CL	Serial No.	Parts catalogue code
17	63253-Z30-C90	SEAL(10X6X200)	-	-	-	-	1		
18	63360-Z30-C90ZA	PANEL ASSY., RR. *NH314*.....CONDUCT GRAY	-	-	-	-	1		
19	63361-Z30-C90ZA	PANEL, RR. *NH314*.....CONDUCT GRAY	-	-	-	-	1		
20	64411-Z30-C90	INSULATOR, RR. PANEL	-	-	-	-	1		
21	64641-Z30-C90	INSULATOR, R. SIDE PANEL	-	-	-	-	1		
22	90123-MC7-000	SCREW, METER VISOR SETTING ..	-	-	-	-	8		
23	93913-25110	SCREW, TAPPING, 5X10(PO)	-	-	-	-	12		

BATTERY TRAY

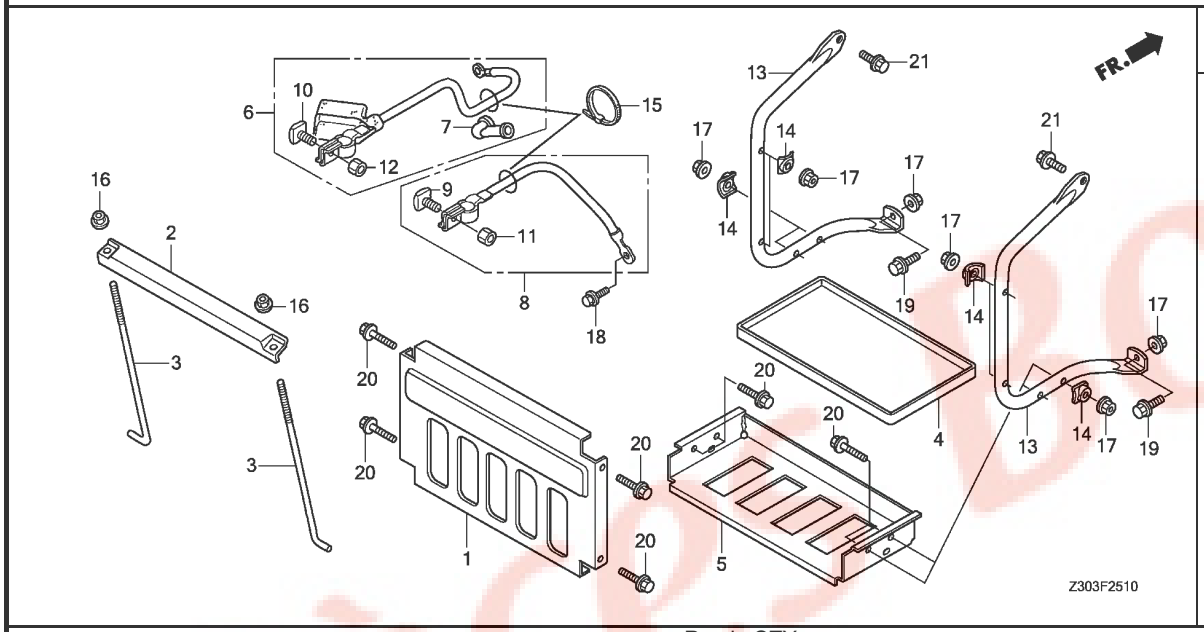

Ref. No.	L.O.N.	(Relative ref. Number) Description	F.R.T.
4	4101T4	TRAY, BATTERY ----------	0.1
5	4101X8	BASE, BATTERY TRAY ----------	0.1
6	610115	CABLE, BATTERY STARTER -------	0.1
8	6111A4	CABLE, EARTH ----------	0.1
13	6101C0	GUARD, BATTERY :RIGHT --------	0.3
	6101C1	GUARD, BATTERY :LEFT ---------	0.3

Ref. No.	Part No.	Description	Reqd. QTY EG 5500 CX	EG 6500 CX	EG 5500 CXS	EG 6500 CXS	EG 5500 CL	Serial No.	Parts catalogue code
1	31511-Z30-B60ZA	PLATE, BATTERY GUARD *NH105*...MAT BLACK (#15-#20)	-	-	1	1	-		
2	31512-Z18-W60	PLATE, BATTERY SETTING ------	-	-	1	1	-		
3	31514-ZR8-T70	BOLT, BATTERY SETTING -------	-	-	2	2	-		
4	31521-SD9-000	BOX ASSY., BATTERY ----------	-	-	1	1	-		
5	31528-Z18-W60ZB	BASE, BATTERY TRAY *NH105*...MAT BLACK (#15-#20)	-	-	1	1	-		
6	32410-Z22-A31	CABLE ASSY., STARTING -------	-	-	1	1	-		
7	32411-Z18-W60	COVER, STARTING MOTOR TERMINAL	-	-	1	1	-		
8	32600-Z18-W60	CABLE ASSY., EARTH ----------	-	-	1	1	-		
9	32601-SK7-900	BOLT, BATTERY TERMINAL ------	-	-	1	1	-		
10	32601-Z22-000	BOLT, BATTERY TERMINAL ------	-	-	1	1	-		
11	32602-SK7-900	NUT, BATTERY TERMINAL -------	-	-	1	1	-		
12	32602-Z22-000	NUT, BATTERY TERMINAL -------	-	-	1	1	-		
13	50365-Z18-W60ZB	GUARD, BATTERY *NH105*...MAT BLACK (#15-#20)	-	-	2	2	-		
14	90501-Z18-W60	WASHER, FRAME JOINT ---------	-	-	8	8	-		
15	90650-KV6-003	BAND, WIRE, 95MM ----------	-	-	2	2	-		
16	94050-06000	NUT, FLANGE, 6MM ----------	-	-	2	2	-		
17	94050-06070	NUT, FLANGE, 6MM ----------	-	-	10	10	-		
18	95701-06012-00	BOLT, FLANGE, 6X12 ----------	-	-	1	1	-		
19	95701-06012-07	BOLT, FLANGE, 6X12 ----------	-	-	2	2	-		
20	95701-06030-07	BOLT, FLANGE, 6X30 ----------	-	-	8	8	-		
21	95701-08012-07	BOLT, FLANGE, 8X12 ----------	-	-	2	2	-		

ROTOR/STATOR

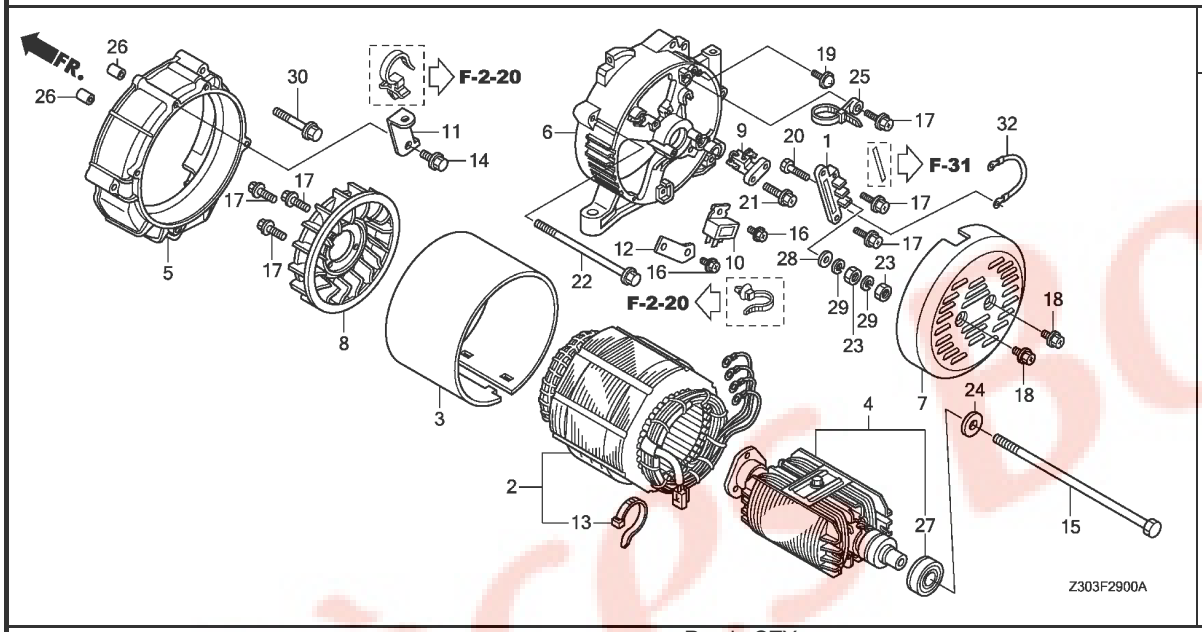

Ref. No.	L.O.N.	(Relative ref. Number) Description	F.R.T.
1	6201B2	TERMINAL, VOLT CHANGE ·····	0.3
2	6201B9	STATOR, GENERATOR ·····	1.5
		.INCLUDES: Engine removal and installation	
4	6201A9	ROTOR, GENERATOR ·····	1.6
		.INCLUDES: Engine removal and installation	
5	6201B5	HOUSING, GENERATOR :FRONT ····	1.5
		.INCLUDES: Engine removal and installation	
6	6201B6	HOUSING, GENERATOR :REAR ·····	1.4
		.INCLUDES: Engine removal and installation	
7	6201C7	COVER, GENERATOR END ·····	0.1
8	6201B7	FAN, GENERATOR COOLING ·····	1.5
		.INCLUDES: Engine removal and installation	
9	6171B8	BRUSH, GENERATOR ·····	0.2
10	6201A0	DIODE, DIRECT CURRENT ·····	0.2
27	6201A7	BEARING, GENERATOR ROTOR ·····	1.5
		.INCLUDES: Engine removal and installation	

Ref. No.	Part No.	Description	Reqd. QTY EG 5500 CX	EG 6500 CX	EG 5500 CXS	EG 6500 CXS	EG 5500 CL	Serial No.	Parts catalogue code
1	31118-Z22-000	TERMINAL, VOLT CHANGE ·····	1	1	1	1	1		
2	31120-Z30-A80	STATOR ASSY.(EG-U) ·····	1	-	1	-	-	-------- --------	UH
	31120-Z30-B60	STATOR ASSY.(EG-R) ·····	-	1	-	1	-	-------- --------	KH,MH,RH
	31120-Z30-B40	STATOR ASSY.(EG-LD) ·····	-	1	-	1	-	-------- --------	LDH,LTH
	31120-Z30-A70	STATOR ASSY.(EG-S) ·····	-	1	-	1	-	-------- --------	SH,SKH
	31120-Z30-R70	STATOR ASSY.(EG-RG) ·····	-	-	1	-	-	-------- --------	RGH
	31120-Z30-C90	STATOR ASSY.(EG-B) ·····	-	-	-	-	1	-------- --------	BT
	31120-Z30-C50	STATOR ASSY.(EG-G) ·····	-	-	-	-	1	-------- --------	FT,GT,GWT,ITT
3	31127-Z17-000ZB	COVER, STATOR *NH105*...MAT BLACK (#15-#20)	1	1	1	1	1		
4	31130-Z30-000	ROTOR COMP. ·····	1	1	1	1	1		
5	31161-Z30-000	HOUSING, FR. ·····	1	1	1	1	1		
6	31171-Z22-000	HOUSING, RR. ·····	1	1	1	1	1		
7	31186-Z22-000ZA	COVER, GENERATOR END *NH105*...MAT BLACK (#15-#20)	1	1	1	1	-		
	31186-Z30-C90ZA	*NH105*...MAT BLACK (#15-#20)	-	-	-	-	1		
8	31190-Z30-000	FAN COMP., GENERATOR COOLING	1	1	1	1	1		
9	31295-Z30-000	BRUSH ASSY. ·····	1	1	1	1	1		
10	31720-ZA8-013	DIODE COMP., D.C. ·····	1	1	1	1	-		
11	32103-Z30-000	BRACKET, WIRE HARNESS CLIP ··	1	1	1	1	1		
12	32104-Z30-000	BRACKET, RR. HOUSING ·····	1	1	1	1	-		
13	32903-ZC8-N01	TIE, CABLE(C) ·····	1	1	1	1	1		
14	90013-883-000	BOLT, FLANGE, 6X12(CT200) ···	1	1	1	1	1		
15	90021-ZC2-000	BOLT, HEX., 10X250 ·····	1	1	1	1	1		
16	90031-875-000	SCREW, TAPPING, 5X12 ·····	2	2	2	2	-		
17	90032-875-000	SCREW, TAPPING, 5X14 ·····	6	6	6	6	6		

ROTOR/STATOR

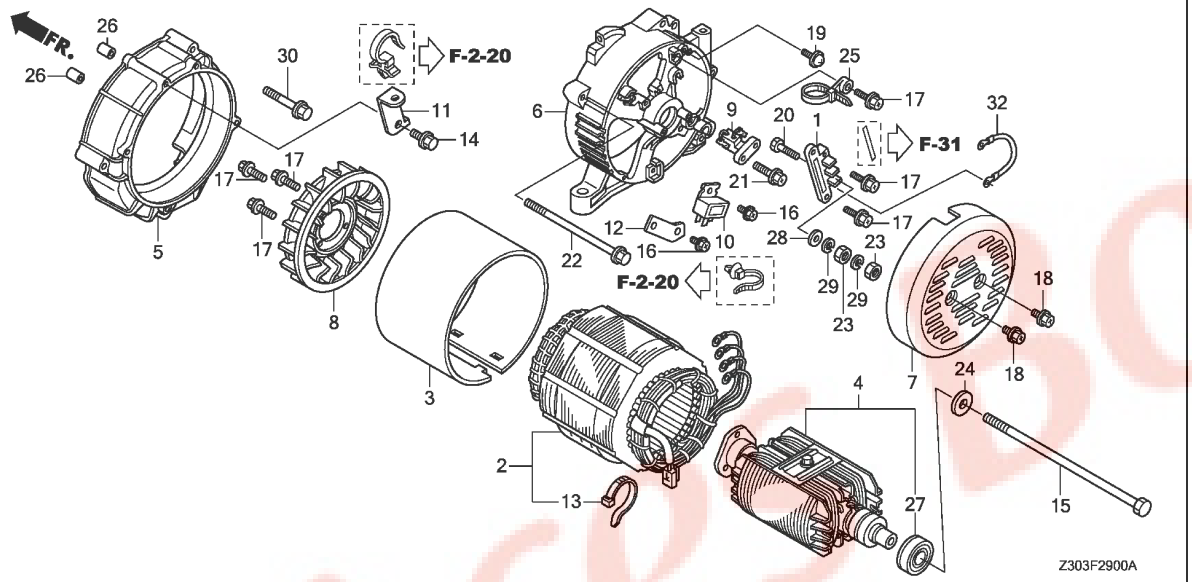

Ref. No.	Part No.	Description	Reqd. QTY EG 5500 CX	EG 6500 CX	EG 5500 CXS	EG 6500 CXS	EG 5500 CL	Serial No.		Parts catalogue code
18	90101-Z18-000	SCREW, TAPPING, 5X12	2	2	2	2	2			
19	90102-Z21-000	SCREW, PAN, 5X12	1	1	1	1	1			
20	90102-Z22-000	BOLT, HEX., 5X20	2	2	2	2	-	--------	--------	KH,MH,RGH,RH,SH,SKH,UH
			-	4	-	-	-	--------	--------	LDH,LTH
			-	-	-	4	4	--------	--------	BT,LDH,LTH
			-	-	-	-	2	--------	--------	FT,GT,GWT,ITT
21	90131-Z30-000	SCREW, TAPPING, 5X18	1	1	1	1	1			
22	90157-ZR7-T62	BOLT, FLANGE, 6X160	4	4	4	4	4			
23	90301-Z22-000	NUT, HEX., 5MM	4	4	4	4	-	--------	--------	KH,MH,RGH,RH,SH,SKH,UH
			-	8	-	-	-	--------	--------	LDH,LTH
			-	-	-	8	8	--------	--------	BT,LDH,LTH
			-	-	-	-	4	--------	--------	FT,GT,GWT,ITT
24	90504-ZA0-000	WASHER, 10.5MM	1	1	1	1	1			
25	90673-Z22-000	TIE, CABLE	1	1	1	1	1			
26	90701-Z7E-000	DOWEL PIN, 8X12	2	2	2	2	2			
27	91051-ZB4-003	BEARING ASSY., 6204	1	1	1	1	1			
28	94101-05800	WASHER, PLAIN, 5MM	2	2	2	2	-	--------	--------	KH,MH,RGH,RH,SH,SKH,UH
			-	4	-	-	-	--------	--------	LDH,LTH
			-	-	-	4	4	--------	--------	BT,LDH,LTH
			-	-	-	-	2	--------	--------	FT,GT,GWT,ITT
29	94111-05800	WASHER, SPRING, 5MM	4	4	4	4	-	--------	--------	KH,MH,RGH,RH,SH,SKH,UH
			-	8	-	-	-	--------	--------	LDH,LTH
			-	-	-	8	8	--------	--------	BT,LDH,LTH
			-	-	-	-	4	--------	--------	FT,GT,GWT,ITT
30	95701-08060-00	BOLT, FLANGE, 8X60	4	4	4	4	4			
32	31161-ZB4-691	CORD, EARTH	-	-	-	-	1	--------	--------	BT

LABEL

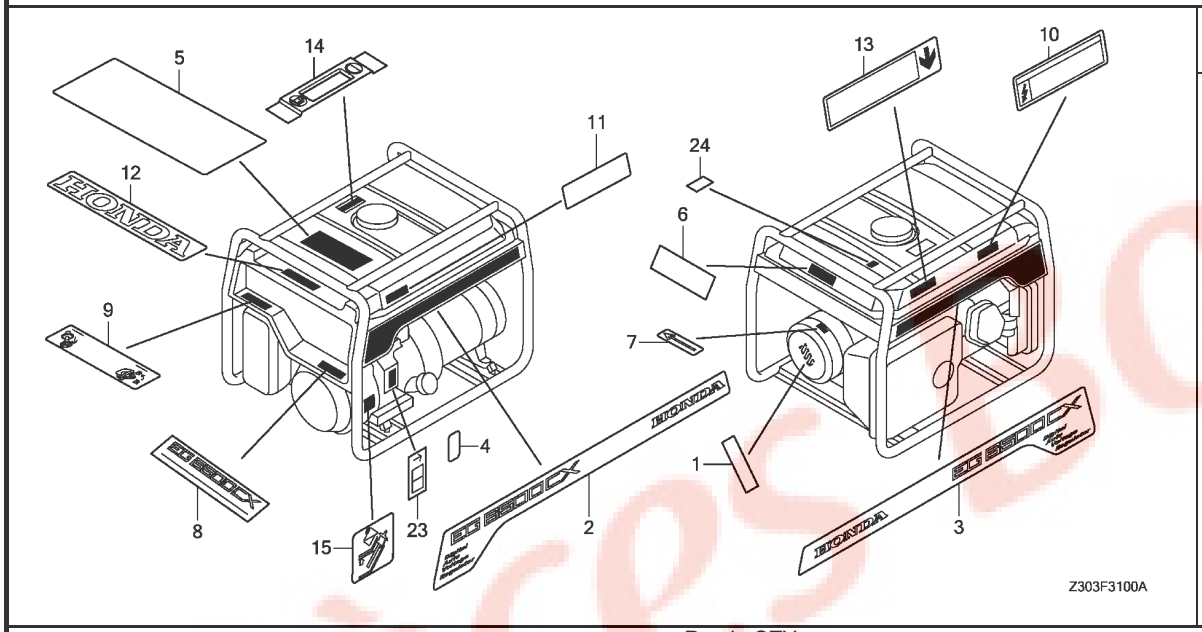

Ref. No.	L.O.N.	(Relative ref. Number) Description	F.R.T.
		NO INFORMATION ----------	

Ref. No.	Part No.	Description	Reqd. QTY EG 5500 CX	EG 6500 CX	EG 5500 CXS	EG 6500 CXS	EG 5500 CL	Serial No.		Parts catalogue code
1	31119-Z18-000	MARK, VOLT ----------	1	1	1	1	1	--------	--------	FT,GT,GWT,ITT,KH,MH,RGH,RH,SH,SKH,UH
	31119-Z18-D20	----------	-	1	-	1	1	--------	--------	BT,LDH,LTH
2	87101-Z30-C80	MARK, R. EMBLEM(EG5500CX) ---	1	-	-	-	-			
	87101-Z30-D60	MARK, R. EMBLEM(EG6500CX) ---	-	1	-	-	-			
	87101-Z30-A80	MARK, R. EMBLEM(EG5500CXS) --	-	-	1	-	-			
	87101-Z30-B60	MARK, R. EMBLEM(EG6500CXS) --	-	-	-	1	-			
	87101-Z30-C90	MARK, R. EMBLEM(EG5500CL) ---	-	-	-	-	1			
3	87102-Z30-C80	MARK, L. EMBLEM(EG5500CX) ---	1	-	-	-	-			
	87102-Z30-D60	MARK, L. EMBLEM(EG6500CX) ---	-	1	-	-	-			
	87102-Z30-A80	MARK, L. EMBLEM(EG5500CXS) --	-	-	1	-	-			
	87102-Z30-B60	MARK, L. EMBLEM(EG6500CXS) --	-	-	-	1	-			
	87102-Z30-C90	MARK, L. EMBLEM(EG5500CL) ---	-	-	-	-	1			
4	87117-ZW5-000	MARK, FUSE(10A) ----------	-	-	1	1	-			
5	87150-Z11-A30	MARK, CAUTION(E) ----------	1	-	1	-	-	--------	--------	UH
	87150-Z11-A70	MARK, CAUTION ----------	-	1	-	1	-	--------	--------	KH,LDH,MH,RH,SH
	87150-Z15-W20	MARK, CAUTION(TAIWAN) -------	-	1	-	1	-	--------	--------	LTH
	87150-Z11-R10	MARK, CAUTION ----------	-	1	-	1	-	--------	--------	SKH
	87150-Z26-S70	MARK, CAUTION(RG) ----------	-	-	1	-	-	--------	--------	RGH
	87150-Z25-A61	MARK, CAUTION(EC) ----------	-	-	-	-	1			
6	87152-Z30-C80	MARK, SPEC(CX-U) ----------	1	-	-	-	-			
	87152-Z30-D81	MARK, SPEC(CX-K) ----------	-	1	-	-	-	--------	--------	KH
	87152-Z30-D40	MARK, SPEC(CX-LD) ----------	-	1	-	-	-	--------	--------	LDH
	87152-Z30-D10	MARK, SPEC(CX-LT) ----------	-	1	-	-	-	--------	--------	LTH
	87152-Z30-D60	MARK, SPEC(CX-R) ----------	-	1	-	-	-	--------	--------	MH,RH
	87152-Z30-C70	MARK, SPEC(CX-S) ----------	-	1	-	-	-	--------	--------	SH
	87152-Z30-S10	MARK, SPEC(CX-SK) ----------	-	1	-	-	-	--------	--------	SKH
	87152-Z30-R70	MARK, SPEC(CXS-RG) ----------	-	-	1	-	-	--------	--------	RGH
	87152-Z30-A80	MARK, SPEC(CXS-U) ----------	-	-	1	-	-	--------	--------	UH

LABEL

Ref. No.	Part No.	Description	Reqd. QTY EG 5500 CX	EG 6500 CX	EG 5500 CXS	EG 6500 CXS	EG 5500 CL	Serial No.		Parts catalogue code
(6)	87152-Z30-B81	MARK, SPEC(CXS-K)	-	-	-	1	-	--------	--------	KH
	87152-Z30-B40	MARK, SPEC(CXS-LD)	-	-	-	1	-	--------	--------	LDH
	87152-Z30-B10	MARK, SPEC(CXS-LT)	-	-	-	1	-	--------	--------	LTH
	87152-Z30-B60	MARK, SPEC(CXS-R)	-	-	-	1	-	--------	--------	MH,RH
	87152-Z30-A70	MARK, SPEC(CXS-S)	-	-	-	1	-	--------	--------	SH
	87152-Z30-R10	MARK, SPEC(CXS-SK)	-	-	-	1	-	--------	--------	SKH
7	87178-Z30-D80	MARK, DIRECTION	-	1	-	1	-	--------	--------	KH
8	87301-Z30-C80	MARK, FR. EMBLEM(EG5500CX)	1	-	-	-	-			
	87301-Z30-D60	MARK, FR. EMBLEM(EG6500CX)	-	1	-	-	-			
	87301-Z30-A80	MARK, FR. EMBLEM(EG5500CXS)	-	-	1	-	-			
	87301-Z30-B60	MARK, FR. EMBLEM(EG6500CXS)	-	-	-	1	-			
	87301-Z30-C90	MARK, FR. EMBLEM(EG5500CL)	-	-	-	-	1			
9	87403-Z30-D60	MARK, OPERATION	1	1	1	1	-	--------	--------	KH,LDH,MH,RH,SH,UH
	87403-Z30-D10	MARK, OPERATION(LT)	-	1	-	1	-	--------	--------	LTH
	87403-Z30-S10	MARK, OPERATION(SK)	-	1	-	1	-	--------	--------	SKH
	87403-Z30-R70	MARK, OPERATION(RG)	-	-	1	-	-	--------	--------	RGH
	87403-Z30-C90	MARK, OPERATION(B)	-	-	-	-	1			
10	87511-Z30-S10	MARK, CAUTION VOLTAGE	-	1	-	1	-	--------	--------	SKH
11	87530-ZR4-H60	LABEL, OIL ALERT	1	1	1	1	-	--------	--------	KH,LDH,MH,RH,SH,UH
	87530-Z15-W20	LABEL, OIL ALERT(LT)	-	1	-	1	-	--------	--------	LTH
	87530-Z30-S10	LABEL, OIL ALERT	-	1	-	1	-	--------	--------	SKH
	87530-Z15-W70	LABEL, OIL ALERT(RG)	-	-	1	-	-	--------	--------	RGH
12	87531-Z30-000	MARK, HONDA	1	1	1	1	1			
	87539-Z22-A60	MARK, EX. CAUTION	-	-	-	-	1			
13	87539-Z30-C80	MARK, EX. CAUTION	1	-	1	-	-	--------	--------	UH
	87539-Z30-D60		-	1	-	1	-	--------	--------	KH,LDH,MH,RH,SH
	87539-Z30-D10		-	1	-	1	-	--------	--------	LTH
	87539-Z30-S10		-	1	-	1	-	--------	--------	SKH
	87539-Z30-R70		-	-	1	-	-	--------	--------	RGH
14	87565-ZR6-T60	PLATE, FUEL INDICATION	1	1	1	1	1			
15	87594-ZR4-V60	MARK, OIL CHECK	1	1	1	1	1			
23	87540-Z22-H60	MARK, HOT CAUTION	-	-	-	-	1			
24	87709-Z07-S50	MARK, RECYCLE	-	-	-	-	1	--------	--------	GWT

F-32 TOOL

H 1

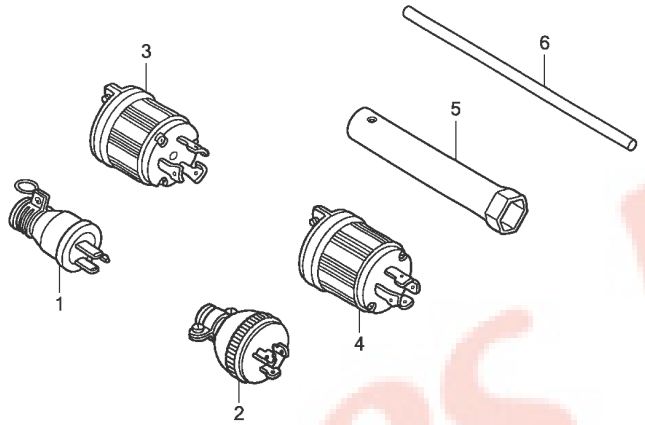

Z303F3200

Ref. No.	L.O.N.	(Relative ref. Number) Description	F.R.T.
		NO INFORMATION ----------	

Ref. No.	Part No.	Description	Reqd. QTY EG 5500 CX	EG 6500 CX	EG 5500 CXS	EG 6500 CXS	EG 5500 CL	Serial No.	Parts catalogue code
1	32310-836-000	PLUG ASSY., CONSENT(15A/125V)	-	2	-	2	-	-------- --------	LDH,LTH
2	32310-Z15-R60	PLUG ASSY., CONSENT(20A-250V)	-	2	2	2	-	-------- --------	KH,RGH,RH,SH,SKH
3	32310-ZP0-K30	PLUG ASSY.(30A-125/250V) ----	-	1	-	1	-	-------- --------	LDH,LTH
4	32311-ZP0-K30	PLUG ASSY.(30A/125V) --------	-	1	-	1	-	-------- --------	LDH,LTH
5	89216-ZR6-T60	WRENCH, PLUG ----------	1	1	1	1	1		
6	99005-01000	BAR A, HANDLE ----------	1	1	1	1	1		

FOP-1 WHEEL KIT(4-WHEELS)

H 2

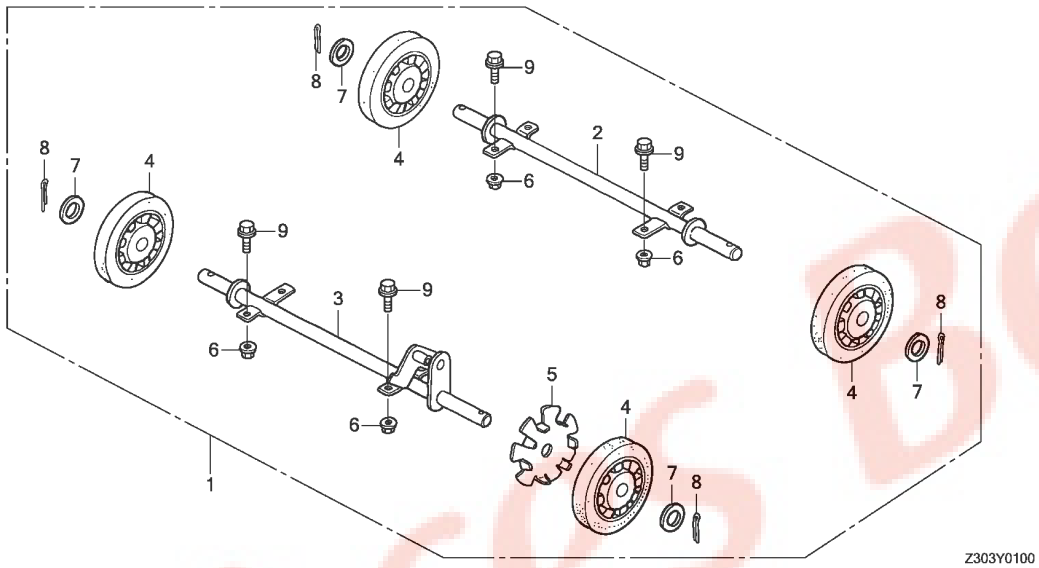

Ref. No.	L.O.N.	(Relative ref. Number) Description	F.R.T.
2		(3)	
	2091E4	SHAFT, WHEEL	0.2
4	7101B7	WHEEL	0.1

Ref. No.	Part No.	Description	Reqd. QTY EG 5500 CX	EG 6500 CX	EG 5500 CXS	EG 6500 CXS	EG 5500 CL	Serial No.	Parts catalogue code
1	06710-Z22-A30	WHEEL KIT(4-WHEELS)	(1)	(1)	(1)	(1)	(1)		
2	42310-Z22-A30	SHAFT COMP., R. WHEEL	(1)	(1)	(1)	(1)	(1)		
3	42320-Z22-A30	SHAFT COMP., L. WHEEL	(1)	(1)	(1)	(1)	(1)		
4	42710-ZB4-000	WHEEL COMP.	(4)	(4)	(4)	(4)	(4)		
5	42753-880-810	PLATE, LOCK	(1)	(1)	(1)	(1)	(1)		
6	94050-08070	NUT, FLANGE, 8MM	(8)	(8)	(8)	(8)	(8)		
7	94102-20000	WASHER, PLAIN, 20MM	(4)	(4)	(4)	(4)	(4)		
8	94201-40280	PIN, SPLIT, 4.0X28	(4)	(4)	(4)	(4)	(4)		
9	95701-08016-07	BOLT, FLANGE, 8X16	(8)	(8)	(8)	(8)	(8)		

3

WHEEL KIT

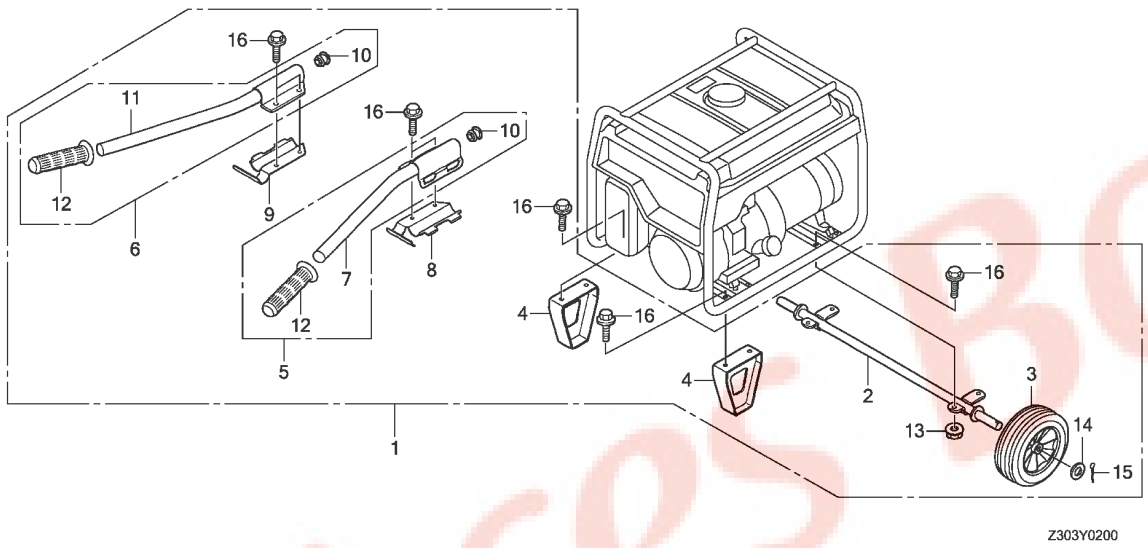

Ref. No.	L.O.N.	(Relative ref. Number) Description	F.R.T.
2	2091E4	SHAFT, WHEEL ----------	0.2
3	7101B7	WHEEL ----------	0.1
4	4101R4	STAND ----------	0.1
		.NOTE: Same time for two units	
5	8101N2	HANDLE :RIGHT ----------	0.1
6	8101N1	HANDLE :LEFT ----------	0.1

Ref. No.	Part No.	Description	Reqd. QTY EG 5500 CX	EG 6500 CX	EG 5500 CXS	EG 6500 CXS	EG 5500 CL	Serial No.	Parts catalogue code
1	06710-Z22-A40ZA	WHEEL KIT(2-WHEELS)							
		NH105...MAT BLACK (#15-#20)	-	-	-	-	(1)		
2	42310-Z22-E30ZA	SHAFT COMP., WHEEL							
		NH105...MAT BLACK (#15-#20)	-	-	-	-	(1)		
3	42710-Z22-621	WHEEL COMP., 254X63.5 -------	-	-	-	-	(2)		
4	51511-Z22-E30ZA	STAND COMP.							
		NH105...MAT BLACK (#15-#20)	-	-	-	-	(2)		
5	53100-Z22-000ZA	HANDLE ASSY., R. UPPER							
		NH105...MAT BLACK (#15-#20)	-	-	-	-	(1)		
6	53105-Z22-000ZA	HANDLE ASSY., L. UPPER							
		NH105...MAT BLACK (#15-#20)	-	-	-	-	(1)		
7	53110-Z22-000ZA	HANDLE COMP., R. UPPER							
		NH105...MAT BLACK (#15-#20)	-	-	-	-	(1)		
8	53112-Z22-000ZA	BRACKET, R. LOWER HANDLE							
		NH105...MAT BLACK (#15-#20)	-	-	-	-	(1)		
9	53113-Z22-000ZA	BRACKET, L. LOWER HANDLE							
		NH105...MAT BLACK (#15-#20)	-	-	-	-	(1)		
10	53115-Z22-000	CAP, LOWER HANDLE ----------	-	-	-	-	(2)		
11	53120-Z22-000ZA	HANDLE COMP., L. UPPER							
		NH105...MAT BLACK (#15-#20)	-	-	-	-	(1)		
12	53165-Z22-000	GRIP, HANDLE ----------	-	-	-	-	(2)		
13	94050-08070	NUT, FLANGE, 8MM ----------	-	-	-	-	(4)		
14	94102-20000	WASHER, PLAIN, 20MM ---------	-	-	-	-	(2)		
15	94201-40280	PIN, SPLIT, 4.0X28 ---------	-	-	-	-	(2)		
16	95701-08016-07	BOLT, FLANGE, 8X16 ---------	-	-	-	-	(12)		

PART NO. INDEX

Part Number	Address	Page	Ref.
06000			
06710-Z22-A30	H2	75	1
06710-Z22-A40ZA	H3	76	1
11000			
11300-Z1C-E20	D5	23	1
11300-Z7E-E60	D5	23	1
11381-Z5T-000	D5	23	2
11381-ZE3-801	D5	23	2
12000			
12000-Z5T-407	D3	21	1
12000-Z7E-406	D3	21	1
12000-Z7E-407	D3	21	1
12200-ZF6-406	D1	19	1
12204-ZE2-306	D1	19	2
12205-ZE2-305	D1	19	3
12209-Z7E-003	D8	26	1
12209-ZE8-003	D8	26	1
12210-Z5T-406	D1	19	1
12216-ZE2-300	D1	19	4
12251-Z5T-003	D1	19	5
12251-ZF6-W01	D1	19	5
12310-Z5T-000	D1	19	6
12310-ZE2-020	D1	19	6
12391-ZE2-020	D1	19	7
13000			
13010-Z5R-004	D7	25	1
13010-Z5T-003	D7	25	1
13011-Z5R-004	D7	25	1
13011-Z5T-003	D7	25	1
13012-Z5R-004	D7	25	1
13012-Z5T-003	D7	25	1
13013-Z5R-004	D7	25	1
13013-Z5T-003	D7	25	1
13101-Z5T-800	D7	25	2
13101-Z7E-800	D7	25	2
13102-Z5T-800	D7	25	2
13102-Z7E-800	D7	25	2
13103-Z5T-800	D7	25	2
13103-Z7E-800	D7	25	2
13104-Z5T-800	D7	25	2
13104-Z7E-800	D7	25	2
13111-Z5T-000	D7	25	3
13111-Z7E-000	D7	25	3
13200-Z1C-000	D7	25	4
13200-Z1C-305	D7	25	4
13200-ZE3-315	D7	25	4
13310-Z7E-700	D6	24	1
13310-ZK6-D41	D6	24	1
13351-Z7E-000	D6	24	2
13351-ZE3-010	D6	24	2
14000			
14100-Z5T-820	D8	26	2
14100-ZF6-W01	D8	26	2
14410-Z7E-000	D8	26	3
14410-ZK6-880	D8	26	3
14431-ZE2-010	D8	26	4
14441-Z7E-000	D8	26	5
14441-ZE2-000	D8	26	5
14451-Z7E-000	D8	26	6
14451-ZE1-013	D8	26	6
14568-ZE1-000	D8	26	7
14711-Z5T-000	D8	26	8
14711-Z7E-000	D8	26	8
14721-Z5T-000	D8	26	9
14721-Z7E-800	D8	26	9
14751-Z1C-000	D8	26	10
14751-Z7E-000	D8	26	10
14771-Z8S-000	D8	26	11
			12
14771-ZE2-000	D8	26	11
14773-ZE2-000	D8	26	12
14775-ZE2-010	D8	26	13
14781-Z7E-000	D8	26	14
14791-Z7E-000	D8	26	15
14791-ZK6-880	D8	26	15
15000			
15620-Z7E-800	D5	23	3
15620-ZE2-700	D5	23	3
15721-Z23-H60	G6	63	1
16000			
16010-ZE3-701	D15	33	1
16010-ZF5-900	E2	36	1
16011-ZA0-931	D15	33	2
	E2	36	2
16013-Z1C-003	D15	33	3
	E2	36	3
16015-Z7B-D11	D15	33	4
16015-ZE8-005	E2	36	4
16016-ZF6-D40	D15	33	5
	E2	36	5
16024-124-760	D15	33	6
16024-ZE1-811	E2	36	6
16028-ZA0-931	D15	33	7
16028-ZE0-005	E2	36	7
16080-Z30-003	G9	66	1
16100-Z1C-E22	E2	36	8
16100-Z7E-E61	D15	33	8
16124-ZE0-005	D15	33	9
	E2	36	9
16148-141-881	D15	33	10
16166-Z1C-E21	E2	36	10
16166-ZF6-005	D15	33	11
16172-ZE3-W10	D15	33	12
	E2	36	11
16173-001-004	G9	66	2
16176-Z2G-D51	D15	33	13
	E2	36	12
16200-Z7E-E61	D15	33	14
16211-Z5T-000	E2	36	13
16211-Z7E-700	D15	33	15
16212-Z5T-000	E2	36	14
16220-ZA0-702	D15	33	16
	E2	36	15
16221-Z5T-000	E2	36	16
16221-ZF6-800	D15	33	17
16223-ZE3-W00	D15	33	18
16260-Z7E-E60	D15	33	19
16261-Z7E-E60	D15	33	20
16262-ZE2-711	D15	33	21
16263-Z7B-000	D15	33	22
16264-ZE2-701	D15	33	23
16265-Z7E-000	D15	33	24
16268-ZE2-721	D15	33	25
16269-ZA0-800	D16	34	26
	E2	36	17
16400-ZE2-704	D16	34	27
16500-Z1C-E00	E7	41	11
16510-Z7E-000	D5	23	4
16510-ZE3-000	D5	23	4
16511-ZE8-000	D5	23	5
16512-Z7E-000	D5	23	6
16512-ZE3-000	D5	23	6
16513-ZE2-000	D5	23	7
16531-Z0A-000	D5	23	8
16541-Z7E-000	D3	21	2
16541-ZE3-010	D3	21	2
16551-ZE3-000	E7	41	1
16555-ZE3-000	E7	41	2
16561-ZK6-D70	E7	41	3
16562-ZE3-000	E7	41	4
16570-ZK3-D70	E7	41	5
16584-883-300	E7	41	6
16588-Z1C-E00	E7	41	12
16611-Z7E-E60	D16	34	28
16613-893-000	D16	34	29
16615-893-000	D16	34	30
16620-Z1C-000	E2	36	18
16882-Z7E-E60	D16	34	31
16950-Z30-003	G9	66	3
16952-ZA0-000	G9	66	4
16963-Z30-003	G9	66	5
16967-GA6-671	G9	66	6
17000			
17211-899-000	G6	63	2
17220-Z23-H60	G6	63	3
17220-Z30-000	G6	63	3
17222-Z23-H60	G6	63	4
17223-Z23-000	G6	63	5
17223-Z23-H60	G6	63	6
17229-Z23-H60	G6	63	7
17231-Z23-H60	G6	63	8
17233-Z23-H60	G6	63	9
17510-Z30-000ZA	G9	66	7
17537-Z30-C90	G9	66	29
17620-Z22-000	G9	66	8
17630-Z30-000	G9	66	9
17631-899-000	G9	66	10
17670-ZT5-640	G9	66	11
17701-Z30-D60	G9	66	12
17702-Z30-D60	G9	66	13
18000			
18310-Z1C-E20	G8	65	1
18310-Z30-D61	G7	64	1
18320-Z22-000ZA	G7	64	2
18320-Z30-S30ZA	G8	65	2
18324-Z30-C90ZA	G8	65	13
18326-Z30-D60ZA	G7	64	3
18329-Z22-000	G7	64	4
18331-Z22-000	G7	64	5
18331-Z30-000	G8	65	4
18333-ZB4-801	G7	64	6
18333-ZE3-801	G7	64	7
18333-ZF6-W01	G8	65	5
18338-Z30-000	G8	65	6
18338-Z30-D60	G7	64	8
18350-Z5T-800	G8	65	7
18355-Z22-E30	G7	64	9
18376-Z30-C90	G8	65	14
18381-ZE2-801	G8	65	8
19000			
19511-Z7E-700	E3	37	1
19511-ZK6-D70	E3	37	1
19610-Z1C-E20ZA	D14	32	1
19610-Z7E-E60ZA	D14	32	1
19631-Z5T-000	D14	32	2
19631-ZE3-W00	D14	32	2
19656-Z25-R50	G10	67	15
28000			
28400-Z1C-E21ZA	D13	31	1
28400-Z7E-E61ZA	D12	30	1
28410-Z7E-003ZA	D12	30	2
28410-ZE3-W01ZB	D13	31	2
28420-Z7E-003	D12	30	3
28421-ZE3-W01	D13	31	3
28422-ZE2-W01	D13	31	4
28422-ZH8-801	D12	30	4
28431-ZH8-801	D12	30	5
28433-Z2E-003	D12	30	6
28441-Z2E-003	D12	30	7
28441-ZE2-W01	D13	31	5
28442-Z7E-003	D12	30	8
28442-ZE2-W01	D13	31	6
28443-ZE2-W01	D13	31	7
28443-ZH8-801	D12	30	9
28444-ZE2-W01	D13	31	8
28451-Z7E-000	E3	37	2
28451-ZE3-W01	E3	37	2
28461-Z2E-003	D12	30	10
28461-Z5T-003	D13	31	9
28462-Z1C-801	D13	31	10
28462-Z7E-E61	D12	30	11
28463-Z5T-003	D13	31	11
30000			
30500-Z5T-003	E5	39	1
30500-Z7E-003	E4	38	1
30595-Z7E-003	E4	38	2
	E5	39	2
30700-Z1C-811	E5	39	3
30700-Z1T-003	E4	38	3
31000			
31110-Z5T-810	E3	37	3
31110-Z7E-811	E3	37	3
31110-Z7E-821	E3	37	4
31118-Z22-000	G13	70	1
31119-Z18-000	G15	72	1
31119-Z18-D20	G15	72	1
31120-Z30-A70	G13	70	2
31120-Z30-A80	G13	70	2
31120-Z30-B40	G13	70	2
31120-Z30-B60	G13	70	2
31120-Z30-C50	G13	70	2
31120-Z30-C90	G13	70	2
31120-Z30-R70	G13	70	2
31127-Z17-000ZB	G13	70	3
31130-Z30-000	G13	70	4
31161-Z30-000	G13	70	5
31161-ZB4-691	G14	71	32
31171-Z22-000	G13	70	6
31186-Z22-000ZA	G13	70	7
31186-Z30-C90ZA	G13	70	7
31190-Z30-000	G13	70	8
31204-ZA0-003	E6	40	1
31206-ZE3-003	E6	40	2
31207-ZE3-003	E6	40	3
31210-ZE3-023	E6	40	4
31211-ZE2-003	E6	40	5
31212-ZE3-003	E6	40	6
31213-ZE2-003	E6	40	7
31215-ZE2-003	E6	40	8
31218-ZE3-003	E6	40	9
31219-ZE2-003	E6	40	10
31222-ZE3-791	E6	40	11
31231-ZE2-003	E6	40	12
31232-ZE3-003	E6	40	13
31233-ZE2-003	E6	40	14
31295-Z30-000	G13	70	9
31408-880-000	F1	42	1
	F3	44	1
	F5	46	1

PART NO. INDEX

Part Number	Address	Page	Ref.
31408-880-000	F7	48	1
	F9	50	1
	F11	52	1
31409-880-000	F1	42	2
	F3	44	2
	F5	46	2
	F7	48	2
	F9	50	2
	F11	52	2
31426-Z18-000	F3	44	3
	F9	50	3
	F11	52	3
	F13	54	1
	F16	57	1
31426-Z22-000	F14	55	1
	F16	57	2
	G2	59	1
31428-Z22-A60	F1	42	3
	F3	44	4
	F5	46	3
	F7	48	3
	F9	50	4
	F11	52	4
	F13	54	2
	F14	55	2
	F16	57	3
	G2	59	2
31511-Z30-B60ZA	G12	69	1
31511-Z7E-000	E4	38	4
31511-ZE3-000	E5	39	4
31512-Z18-W60	G12	69	2
31512-ZE2-000	E4	38	5
	E5	39	5
31514-ZR8-T70	G12	69	3
31521-SD9-000	G12	69	4
31528-Z18-W60ZB	G12	69	5
31650-Z7E-003	E4	38	6
31720-Z18-003	F1	42	4
	F3	44	5
	F5	46	4
	F7	48	4
	F9	50	5
	F11	52	5
31720-Z30-C50	G4	61	1
31720-Z30-D40	G4	61	1
31720-Z30-D60	G4	61	1
31720-Z30-R70	G4	61	1
31720-ZA8-013	G13	70	10
31750-735-013	F1	42	5
	F3	44	6
	F5	46	5
	F7	48	5
	F9	50	6
	F11	52	6
32000			
32103-Z30-000	G13	70	11
32104-Z30-000	G13	70	12
32106-Z30-000	G4	61	2
32108-Z30-D60	G4	61	3
32108-Z30-S30	G4	61	3
32110-Z1C-E20	E5	39	6
32150-Z30-A70	F1	42	6
32150-Z30-A80	F3	44	7
32150-Z30-B20	F7	48	6
32150-Z30-B40	F5	46	6
32150-Z30-B60	F1	42	6
32150-Z30-C50	F13	54	3
32150-Z30-C70	F1	42	6
32150-Z30-C80	F3	44	7
32150-Z30-C90	F14	55	3
32150-Z30-D20	F7	48	6
32150-Z30-D40	F5	46	6
32150-Z30-D50	F16	57	4
32150-Z30-D60	F1	42	6
32150-Z30-R10	F9	50	7
32150-Z30-R70	F11	52	7
32150-Z30-S10	F9	50	7
32150-Z30-S20	G2	59	3
32158-Z30-B40	G4	61	4
32158-Z30-B60	G4	61	4
32158-Z30-C50	G4	61	4
32158-Z30-D40	G4	61	4
32158-Z30-D60	G4	61	4
32158-Z30-S30	G4	61	4
32221-Z28-R20	F13	54	4
	F14	55	4
	F16	57	5
	G2	59	4
32310-836-000	H1	74	1
32310-Z15-R60	H1	74	2
32310-ZP0-K30	H1	74	3
32311-ZP0-K30	H1	74	4
32330-Z15-R60	F1	42	7
32330-Z18-B21	F5	46	7
32330-Z22-A90	F11	52	8
	F14	55	5
	F16	57	6
	G2	59	5
32331-Z25-A60	F13	54	5
32331-Z25-B50	F16	57	7
32331-ZA8-720	F7	48	7
32331-ZB3-G90	F16	57	8
	G2	59	6
32331-ZT3-C60	F9	50	8
	F11	52	9
32332-Z07-C81	F3	44	8
32332-Z22-E31	F5	46	8
32332-ZB3-G90	F14	55	6
32334-Z22-A31	F5	46	9
32335-875-610	F9	50	9
	F11	52	10
	F13	54	6
	F16	57	9
32335-898-690	F14	55	7
	F16	57	10
	G2	59	7
32335-Z22-F90	F11	52	11
	F14	55	8
	F16	57	11
	G2	59	8
32345-Z30-A80ZA	F3	44	9
32345-Z30-B20ZA	F7	48	8
32345-Z30-B40ZA	F5	46	10
32345-Z30-B60ZA	F1	42	8
32345-Z30-C50ZA	F13	54	7
32345-Z30-C80ZA	F3	44	9
32345-Z30-C90ZA	F14	55	9
32345-Z30-D20ZA	F7	48	8
32345-Z30-D40ZA	F5	46	10
32345-Z30-D50ZA	F16	57	12
32345-Z30-D60ZA	F1	42	8
32345-Z30-R10ZA	F9	50	10
32345-Z30-R70ZA	F11	52	12
32345-Z30-S10ZA	F9	50	10
32345-Z30-S20ZA	G2	59	9
32356-Z30-000ZA	G4	61	5
32366-Z30-A80	F3	44	10
32366-Z30-B10	F5	46	11
32366-Z30-B20	F7	48	9
32366-Z30-B40	F5	46	11
32366-Z30-B60	F1	42	9
32366-Z30-C50	F13	54	8
32366-Z30-C80	F3	44	10
32366-Z30-C90	F14	55	10
32366-Z30-D10	F5	46	11
32366-Z30-D20	F7	48	9
32366-Z30-D40	F5	46	11
32366-Z30-D50	F16	57	13
32366-Z30-D60	F1	42	9
32366-Z30-R10	F9	50	11
32366-Z30-R70	F11	52	13
32366-Z30-S10	F9	50	11
32366-Z30-S20	G2	59	10
32370-Z30-C91	G4	61	6
32370-Z30-D61	G4	61	6
32370-Z30-S31	G4	61	6
32371-Z30-D61	G5	62	17
32395-Z30-S31	F5	46	12
	F14	55	11
32410-Z22-A31	G12	69	6
32411-Z18-W60	G12	69	7
32600-Z18-W60	G12	69	8
32601-SK7-900	G12	69	9
32601-Z22-000	G12	69	10
32602-SK7-900	G12	69	11
32602-Z22-000	G12	69	12
32610-899-000	G10	67	1
32610-ZD1-A40	G10	67	1
32902-892-003	F1	42	10
	F3	44	11
	F5	46	13
	F7	48	10
	F9	50	12
	F13	54	9
	F14	55	12
	F16	57	14
	G2	59	11
32903-Z22-000	G4	61	7
32903-ZC8-N01	G13	70	13
34000			
34150-ZH7-013	D3	21	3
35000			
35100-Z30-003	F1	42	11
	F3	44	12
	F5	46	14
	F7	48	11
	F9	50	13
	F11	52	14
35111-880-013	F1	42	12
	F3	44	13
	F5	46	15
	F7	48	12
	F9	50	14
	F11	52	15
35120-Z30-003	F1	42	13
	F3	44	14
	F5	46	16
	F7	48	13
	F9	50	15
35120-Z30-801	F13	54	10
	F14	55	13
	F16	57	15
	G2	59	12
35320-Z30-B41	F5	46	17
	F14	55	14
35322-Z30-000	F6	47	18
	F14	55	15
35480-Z7E-003	D3	21	4
35480-ZF6-003	D3	21	4
36000			
36101-ZE3-800	E4	38	7
36135-ZF6-D41	D16	34	32
37000			
37450-Z30-B41	F6	47	19
37450-Z30-B61	F1	42	14
	F7	48	14
	F9	50	16
37450-Z30-R71	F11	52	16
38000			
38220-Z30-A71	F1	42	15
	F9	50	17
38220-Z30-B41	F6	47	20
38220-Z30-B61	F1	42	15
	F7	48	15
38220-Z30-C91	F14	55	16
38220-Z30-R61	F11	52	17
	F13	54	11
	F16	57	16
	G2	59	13
38220-ZR8-F61	F3	44	15
38240-898-000	F2	43	16
	F3	44	16
	F6	47	21
	F7	48	16
	F9	50	18
	F11	52	18
38240-Z23-F90	F13	54	12
	F14	55	17
	F16	57	17
	G2	59	14
38242-Z25-A62	F13	54	13
	F14	55	18
	F16	57	18
	G2	59	15
38250-ZA8-701	F2	43	17
	F3	44	17
	F6	47	22
	F7	48	17
	F9	50	19
	F11	52	19
42000			
42310-Z22-A30	H2	75	2
42310-Z22-E30ZA	H3	76	2
42320-Z22-A30	H2	75	3
42710-Z22-621	H3	76	3
42710-ZB4-000	H2	75	4
42753-880-810	H2	75	5
50000			
50138-Z18-000	G10	67	2
50153-ZR6-000	G10	67	3
50310-Z30-B60ZA	G10	67	4
50310-Z30-C90ZA	G10	67	4
50310-Z30-D60ZA	G10	67	4
50315-Z30-000ZA	G10	67	5
50315-Z30-C90ZA	G10	67	5
50365-Z18-W60ZB	G12	69	13
51000			
51511-Z22-E30ZA	H3	76	4
53000			
53100-Z22-000ZA	H3	76	5
53105-Z22-000ZA	H3	76	6
53110-Z22-000ZA	H3	76	7
53112-Z22-000ZA	H3	76	8
53113-Z22-000ZA	H3	76	9
53115-Z22-000	H3	76	10

PART NO. INDEX

Part Number	Address	Page	Ref.
53120-Z22-000ZA	H3	76	11
53149-964-003	D16	34	33
53165-Z22-000	H3	76	12
63000			
63250-Z30-C90ZA	G10	67	16
63253-Z30-C90	G11	68	17
63360-Z30-C90ZA	G11	68	18
63361-Z30-C90ZA	G11	68	19
64000			
64411-Z30-C90	G11	68	20
64641-Z30-C90	G11	68	21
68000			
68325-Z22-E30	G10	67	6
68325-Z23-E30	G10	67	7
68331-Z18-000	G10	67	8
87000			
87101-Z30-A80	G15	72	2
87101-Z30-B60	G15	72	2
87101-Z30-C80	G15	72	2
87101-Z30-C90	G15	72	2
87101-Z30-D60	G15	72	2
87102-Z30-A80	G15	72	3
87102-Z30-B60	G15	72	3
87102-Z30-C80	G15	72	3
87102-Z30-C90	G15	72	3
87102-Z30-D60	G15	72	3
87117-ZW5-000	G15	72	4
87150-Z11-A30	G15	72	5
87150-Z11-A70	G15	72	5
87150-Z11-R10	G15	72	5
87150-Z15-W20	G15	72	5
87150-Z25-A61	G15	72	5
87150-Z26-S70	G15	72	5
87152-Z30-A70	G16	73	6
87152-Z30-A80	G15	72	6
87152-Z30-B10	G16	73	6
87152-Z30-B40	G16	73	6
87152-Z30-B60	G16	73	6
87152-Z30-B81	G16	73	6
87152-Z30-C70	G15	72	6
87152-Z30-C80	G15	72	6
87152-Z30-D10	G15	72	6
87152-Z30-D40	G15	72	6
87152-Z30-D60	G15	72	6
87152-Z30-D81	G15	72	6
87152-Z30-R10	G16	73	6
87152-Z30-R70	G15	72	6
87152-Z30-S10	G15	72	6
87178-Z30-D80	G16	73	7
87301-Z30-A80	G16	73	8
87301-Z30-B60	G16	73	8
87301-Z30-C80	G16	73	8
87301-Z30-C90	G16	73	8
87301-Z30-D60	G16	73	8
87403-Z30-C90	G16	73	9
87403-Z30-D10	G16	73	9
87403-Z30-D60	G16	73	9
87403-Z30-R70	G16	73	9
87403-Z30-S10	G16	73	9
87511-Z30-S10	G16	73	10
87530-Z15-W20	G16	73	11
87530-Z15-W70	G16	73	11
87530-Z30-S10	G16	73	11
87530-ZR4-H60	G16	73	11
87531-Z30-000	G16	73	12
87539-Z22-A60	G16	73	12
87539-Z30-C80	G16	73	13
87539-Z30-D10	G16	73	13
87539-Z30-D60	G16	73	13
87539-Z30-R70	G16	73	13
87539-Z30-S10	G16	73	13
87540-Z22-H60	G16	73	23
87565-ZR6-T60	G16	73	14
87594-ZR4-V60	G16	73	15
87709-Z07-S50	G16	73	24
88000			
88911-MJ3-000	G6	63	10
89000			
89216-ZR6-T60	H1	74	5
90000			
90001-ZE8-000	D7	25	5
90002-ZE2-U91	G7	64	10
90003-ZH8-801	D12	30	12
90004-ZE2-W01	D13	31	12
90005-ZM3-000	G6	63	11
90007-ZE2-003	E6	40	15
90008-Z1T-000	D12	30	13
90008-ZE2-003	D13	31	13
90012-ZE0-010	D9	27	16
90013-883-000	D3	21	5
	D14	32	3
	E4	38	8
	E5	39	7
	E7	41	7
	G4	61	8
	G13	70	14
90014-Z5T-000	D1	19	8
90014-ZE2-000	D1	19	8
90014-ZE6-000	E4	38	9
	E5	39	8
90015-883-000	E4	38	10
	E5	39	9
90015-Z5T-000	E7	41	8
90015-ZE5-010	E7	41	8
90016-ZE8-000	E4	38	11
90021-ZC2-000	G13	70	15
90031-875-000	G13	70	16
90032-875-000	G13	70	17
90042-ZK6-D70	D1	19	9
90050-ZE1-000	G8	65	9
90101-Z15-000	F2	43	18
	F3	44	18
	F6	47	23
	F7	48	18
	F10	51	20
	F11	52	20
	F13	54	21
	F15	56	29
	G1	58	30
	G3	60	26
90101-Z18-000	G14	71	18
90101-Z30-000	F2	43	19
	F3	44	19
	F6	47	24
	F7	48	19
	F10	51	21
	F11	52	21
	F13	54	22
	F15	56	30
	G1	58	31
	G3	60	27
90102-Z21-000	G14	71	19
90102-Z22-000	G14	71	20
90110-ZE2-003	E6	40	16
90111-Z22-A60	F2	43	20
	F4	45	20
	F6	47	25
	F8	49	20
	F10	51	22
	F11	52	22
	F13	54	14
	F14	55	19
	F16	57	19
	G2	59	16
90112-Z22-000	F2	43	21
	F4	45	21
	F6	47	26
	F8	49	21
	F10	51	23
	F11	52	23
	F13	54	15
	F14	55	20
	F16	57	20
	G2	59	17
90123-MC7-000	G11	68	22
90131-883-000	D3	21	6
90131-Z30-000	G14	71	21
90148-SE0-003	G10	67	9
90157-ZR7-T62	G14	71	22
90201-ZE3-V00	E3	37	5
90206-ZE1-000	D9	27	17
90301-Z22-000	G14	71	23
90312-GFM-970	G4	61	9
90401-ZR4-F30	F2	43	22
	F4	45	22
	F6	47	27
	F8	49	22
	F10	51	24
	F12	53	24
90413-ZK6-880	D9	27	18
90431-ZE2-700	D16	34	34
90432-ZE2-700	D16	34	35
90433-ZE2-700	D16	34	36
90434-ZE2-700	D16	34	37
90441-ZE2-010	D1	19	10
90446-KE1-000	D3	21	7
90446-Z7E-000	D3	21	7
90501-Z15-000	G9	66	14
90501-Z18-W60	G12	69	14
90504-ZA0-000	G14	71	24
90601-Z7E-000	D16	34	38
90601-ZE3-000	D7	25	6
90602-Z7E-000	D16	34	39
90602-ZE1-000	D5	23	9
90603-Z7E-000	D16	34	40
90650-KV6-003	G4	61	10
	G12	69	15
90650-SD9-003	D16	34	41
90672-Z22-003	G4	61	11
90673-Z22-000	G14	71	25
90684-Z7E-000	E4	38	12
90684-ZA0-601	E5	39	10
90701-HC4-000	D5	23	10
90701-Z7E-000	D5	23	10
	G14	71	26
90741-ZE2-000	E3	37	6
90851-898-000	G9	66	15
90854-ZB3-000	G9	66	16
91000			
91001-ZF6-013	D6	24	3
91051-ZB4-003	G14	71	27
91201-Z1C-003	D3	21	8
	D5	23	11
91201-Z7E-003	D3	21	8
	D5	23	11
91203-952-771	D3	21	9
91203-Z7E-003	D3	21	9
91301-805-000	D5	23	12
91353-671-004	D3	21	10
91353-Z7E-003	D3	21	10
91541-S0A-003	D16	34	42
	G4	61	12
	G5	62	18
91551-898-000	G9	66	17
91551-Z15-000	G4	61	13
91551-Z30-000	G5	62	14
91601-ZE2-003	E6	40	17
92000			
92900-08032-0E	D1	19	11
93000			
93500-03005-1A	F2	43	23
	F4	45	23
	F6	47	28
	F8	49	23
	F10	51	25
	F12	53	25
	F13	54	16
	F14	55	21
	F16	57	21
	G2	59	18
93500-03016-0A	F2	43	24
	F4	45	24
	F6	47	29
	F8	49	24
	F10	51	26
	F12	53	26
93500-04010-1A	F2	43	25
	F8	49	25
93500-05012-0A	D16	34	43
93500-05035-0A	E7	41	9
93600-04016-1G	F10	51	27
	F12	53	27
	F13	54	17
	F16	57	22
93600-04020-1G	F4	45	25
93600-05010-0A	G9	66	18
93600-05016-0G	F12	53	28
	F14	55	22
	F16	57	23
	G2	59	19
93892-05012-18	D16	34	44
93892-05032-18	E6	40	18
93893-05016-17	F14	55	23
	G1	58	24
	G2	59	20
93913-15280	F2	43	26
	F4	45	26
	F6	47	30
	F8	49	26
	F10	51	28
	F12	53	29
	F13	54	18
	F15	56	24
	G1	58	25
	G2	59	21
93913-25110	G11	68	23
94000			
94001-05000	F12	53	30
	F15	56	25
	G1	58	26
	G2	59	22

PART NO. INDEX

Part Number	Address	Page	Ref.
94050-04000	F2	43	27
	F6	47	31
	F8	49	27
94050-06000	D16	34	45
	E2	36	20
	E7	41	10
	G10	67	10
	G12	69	16
94050-06070	G12	69	17
94050-08000	G7	64	11
	G8	65	10
	G10	67	11
94050-08070	H2	75	6
	H3	76	13
94050-10000	D3	21	11
	G10	67	12
94070-06080	E6	40	19
94101-05800	G14	71	28
94101-06000	F2	43	28
	F4	45	27
	F6	47	32
	F8	49	28
	F10	51	29
	F12	53	31
	F13	54	19
	F15	56	26
	G1	58	27
	G2	59	23
94101-06800	D5	23	13
94102-20000	H2	75	7
	H3	76	14
94103-05000	D16	34	46
94109-12000	D3	21	12
94111-05800	F12	53	32
	F15	56	27
	G1	58	28
	G3	60	24
	G14	71	29
94111-06000	F2	43	29
	F4	45	28
	F6	47	33
	F8	49	29
	F10	51	30
	F12	53	33
	F13	54	20
	F15	56	28
	G1	58	29
	G3	60	25
94201-40280	H2	75	8
	H3	76	15
94251-10000	D3	21	13
94301-12200	D1	19	12
94305-20122	E2	36	21
95000			
95002-02070	D16	34	47
95002-02080	G9	66	19
95002-02100	G9	66	20
95002-50000	G9	66	21
95002-80000	G9	66	22
95005-35075-10	D16	34	48
95701-06010-07	G7	64	12
	G8	65	11
95701-06012-00	D3	21	14
	G12	69	18
95701-06012-07	G10	67	14
	G12	69	19
95701-06020-00	G5	62	15
95701-06022-07	G9	66	23
95701-06030-07	G12	69	20
95701-06032-08	G6	63	12
95701-08012-07	G12	69	21
95701-08016-00	G7	64	13
	G8	65	12
95701-08016-07	H2	75	9
	H3	76	16
95701-08022-00	G8	65	15
95701-08035-08	E6	40	20
95701-08040-00	D5	23	14
95701-08060-00	G14	71	30
95701-10040-00	G10	67	13
95701-10080-00	D1	19	13
96000			
96001-06012-00	F2	43	30
	F4	45	29
	F6	47	34
	F8	49	30
	F10	51	31
	F12	53	34
96001-06020-00	G5	62	15
96001-06030-00	F2	43	31
	F4	45	30
	F6	47	35
	F8	49	31
	F10	51	32
	F12	53	35
96100-62020-00	D3	21	15
	D5	23	15
96100-62070-00	D5	23	16
98000			
98079-55846	D1	19	14
98079-55876	D1	19	14
98200-31000	G5	62	16
99000			
99005-01000	H1	74	6
99101-ZH8-0980	D16	34	49
	E2	36	22
99101-ZH8-1000	E1	35	49
99101-ZH8-1020	E1	35	49
	E2	36	22
99101-ZH8-1050	E2	36	22
99204-ZA0-0400	E2	36	23
99204-ZA0-0450	E1	35	50

PART NAME INDEX

J 1

Part name	Address	Page	Ref.
[A]			
ALERT UNIT, OIL	D3	21	3
ARMATURE COMP.	E6	40	2
ARM, GOVERNOR	E7	41	1
ARM, VALVE ROCKER	D8	26	4
ARRESTER COMP., SPARK	G8	65	7
ARRESTER, SPARK	G7	64	9
[B]			
BAND	F1	42	10
	F3	44	11
	F5	46	13
	F7	48	10
	F9	50	12
	F13	54	9
	F14	55	12
	F16	57	14
	G2	59	11
BAND, WIRE, 95MM	G4	61	10
	G12	69	15
BARREL ASSY., CYLINDER	D3	21	1
BAR A, HANDLE	H1	74	6
BASE COMP., AIR CLEANER	G6	63	6
BASE COMP., CHOKE	E2	36	18
BASE COMP., HARNESS CLIP	G4	61	3
BASE, BATTERY TRAY	G12	69	5
BASE, HARNESS CLIP	G4	61	3
BEARING ASSY., 6204	G14	71	27
BEARING, RADIAL BALL, 6202	D3	21	15
	D5	23	15
BEARING, RADIAL BALL, 6207	D5	23	16
BEARING, RADIAL BALL, 6207SH	D6	24	3
BOLT-WASHER, 5X14	E6	40	15
BOLT, BATTERY SETTING	G12	69	3
BOLT, BATTERY TERMINAL	G12	69	9
			10
BOLT, CONNECTING ROD	D7	25	5
BOLT, DRAIN PLUG, 12X15	D3	21	6
BOLT, EARTH, 6X16	G10	67	9
BOLT, FLANGE, 10X40	G10	67	13
BOLT, FLANGE, 10X80	D1	19	13
BOLT, FLANGE, 5X18	G6	63	11
BOLT, FLANGE, 6X10	D12	30	13
	D13	31	13
	G7	64	12
	G8	65	11
BOLT, FLANGE, 6X12	D3	21	5
			14
	D14	32	3
	E4	38	8
	E5	39	7
	E7	41	7
	F2	43	30
	F4	45	29
	F6	47	34
	F8	49	30
	F10	51	31
BOLT, FLANGE, 6X12	F12	53	34
	G4	61	8
	G10	67	14
	G12	69	18
			19
	G13	70	14
BOLT, FLANGE, 6X160	G14	71	22
BOLT, FLANGE, 6X20	G5	62	15
BOLT, FLANGE, 6X22	G9	66	23
BOLT, FLANGE, 6X28	E4	38	10
	E5	39	9
BOLT, FLANGE, 6X30	F2	43	31
	F4	45	30
	F6	47	35
	F8	49	31
	F10	51	32
	F12	53	35
	G12	69	20
BOLT, FLANGE, 6X32	G6	63	12
BOLT, FLANGE, 6X35	E4	38	9
	E5	39	8
BOLT, FLANGE, 6X45	E4	38	11
BOLT, FLANGE, 8X12	G12	69	21
BOLT, FLANGE, 8X16	G7	64	13
	G8	65	12
	H2	75	9
	H3	76	16
BOLT, FLANGE, 8X22	G8	65	15
BOLT, FLANGE, 8X35	E6	40	20
BOLT, FLANGE, 8X40	D5	23	14
BOLT, FLANGE, 8X60	G14	71	30
BOLT, GOVERNOR ARM	E7	41	8
BOLT, HEAD COVER	D1	19	8
BOLT, HEX., 10X250	G13	70	15
BOLT, HEX., 5X20	G14	71	20
BOLT, HEX., 6X22	F2	43	20
	F4	45	20
	F6	47	25
	F8	49	20
	F10	51	22
	F11	52	22
	F13	54	14
	F14	55	19
	F16	57	19
	G2	59	16
BOLT, PIVOT, 8MM	D9	27	16
BOLT, STUD, 8X115	D1	19	9
BOLT, STUD, 8X32	D1	19	11
BOX ASSY., BATTERY	G12	69	4
BOX ASSY., JUNCTION	G4	61	6
BRACKET, CENTER	E6	40	5
BRACKET, FR.	E6	40	6
BRACKET, L. LOWER HANDLE	H3	76	9
BRACKET, RR. HOUSING	G13	70	12
BRACKET, R. LOWER HANDLE	H3	76	8
BRACKET, STOPPER	G10	67	2
BRACKET, WIRE HARNESS CLIP	G13	70	11
BREAKER, CIRCUIT	F1	42	15
	F3	44	15
BREAKER, CIRCUIT	F6	47	20
	F7	48	15
	F9	50	17
	F11	52	17
	F13	54	11
	F14	55	16
	F16	57	16
	G2	59	13
BRUSH	E6	40	8
BRUSH ASSY.	G13	70	9
BUSH, ARM PIVOT	D16	34	33
[C]			
CABLE ASSY., EARTH	G12	69	8
CABLE ASSY., STARTING	G12	69	6
CABLE COMP., SUB EARTH	G10	67	1
CABLE, EARTH	G10	67	1
CABLE, STRAP	G4	61	11
CAMSHAFT ASSY.	D8	26	2
CAP ASSY., NOISE SUPPRESSOR	E4	38	3
	E5	39	3
CAP COMP., FUEL FILLER	G9	66	8
CAP, CHOKE DUST	D15	33	10
CAP, LOWER HANDLE	H3	76	10
CAP, OIL FILLER	D5	23	3
CARBURETOR ASSY.	D15	33	8
	E2	36	8
CASE COMP., AIR CLEANER	G6	63	3
CASE COMP., RECOIL STARTER	D12	30	2
	D13	31	2
CASE, CONTROL PANEL	G4	61	5
CHAMBER SET, FLOAT	D15	33	4
	E2	36	4
CLAMPER, CORD	E4	38	4
	E5	39	4
CLIP, GOVERNOR HOLDER	D5	23	9
CLIP, HARNESS	E4	38	12
	E5	39	10
CLIP, HARNESS BAND	D16	34	42
	G4	61	12
	G5	62	18
CLIP, INSULATOR	G10	67	15
CLIP, PISTON PIN, 20MM	D7	25	6
CLIP, TUBE	D16	34	47
	G9	66	19
			20
			21
			22
CLIP, VALVE GUIDE	D1	19	4
CLIP, WIRE HARNESS	D16	34	41
CLUTCH COMP., OVERRUNNING	E6	40	3
COCK ASSY., FUEL	G9	66	3
COIL ASSY., FUEL CUT	E4	38	6
COIL ASSY., IGNITION	E4	38	1
	E5	39	1
COIL ASSY., POWER	E4	38	2
	E5	39	2
COLLAR, BODY COVER	G4	61	9

PART NAME INDEX

J 2

Part name	Address	Page	Ref.
COLLAR, CONTROL CASE	G4	61	13
	G5	62	14
COLLAR, LEVER	D16	34	37
COLLAR, SETTING	D15	33	12
	E2	36	11
COLLAR, TANK CUSHION	G9	66	17
CONTACTOR ASSY.	E6	40	1
CONTROL ASSY.	E7	41	5
			11
CORD, EARTH	G14	71	32
CORD, STOP SWITCH	E4	38	7
CORD, TERMINAL	F13	54	4
	F14	55	4
	F16	57	5
	G2	59	4
COUPLER	F5	46	12
	F14	55	11
COVER ASSY., AUTOMATIC VOLTAGE REGULATOR	G4	61	1
COVER ASSY., CRANKCASE	D5	23	1
COVER COMP., CIRCUIT PROTECTOR	F13	54	13
	F14	55	18
	F16	57	18
	G2	59	15
COVER COMP., FAN	D14	32	1
COVER COMP., HEAD	D1	19	6
COVER, AIR CLEANER	G6	63	8
COVER, CYLINDER HEAD	D1	19	6
COVER, FUSE	G5	62	17
COVER, GENERATOR END	G13	70	7
COVER, STARTING MOTOR TERMINAL	G12	69	7
COVER, STATOR	G13	70	3
CRANKSHAFT COMP.	D6	24	1
CUP, FUEL STRAINER	G9	66	6
[D]			
DIAPHRAGM ASSY.	D16	34	27
DIODE COMP.	F1	42	4
	F3	44	5
	F5	46	4
	F7	48	4
	F9	50	5
	F11	52	5
DIODE COMP., D.C.	G13	70	10
DOWEL PIN, 12X20	D1	19	12
DOWEL PIN, 8X12	D5	23	10
	G14	71	26
[E]			
ELEMENT, AIR CLEANER	G6	63	2
E-RING, 2MM	D16	34	38
E-RING, 4MM	D16	34	39
E-RING, 7MM	D16	34	40
[F]			
FAN COMP., GENERATOR COOLING	G13	70	8
FAN, COOLING	E3	37	1
FILTER COMP., FUEL	G9	66	11
FLOAT SET	D15	33	3
	E2	36	3
FLYWHEEL COMP.	E3	37	3
			4
FRAME COMP.	G10	67	4
FRAME COMP., R. SIDE	G10	67	5
FUSE, BLADE	G5	62	16
[G]			
GASKET SET	D15	33	1
	E2	36	1
GASKET, CYLINDER HEAD	D1	19	5
GASKET, EX. PIPE	G7	64	6
			7
	G8	65	5
GASKET, MUFFLER	G8	65	8
GEAR, DRIVE PINION	E6	40	7
GEAR, REDUCTION	E6	40	11
GOVERNOR ASSY.	D5	23	4
GRIP, HANDLE	H3	76	12
GRIP, REINFORCEMENT	D13	31	11
GRIP, STARTER	D12	30	10
	D13	31	9
GROMMET, CHOKE ROD	D16	34	29
GROMMET, CORD	E4	38	5
	E5	39	5
GROMMET, FENDER	G6	63	10
GUARD, BATTERY	G12	69	13
GUIDE, CHOKE ROD	D16	34	30
GUIDE, EX. VALVE	D1	19	3
GUIDE, IN. VALVE	D1	19	2
GUIDE, PUSH ROD	D8	26	15
GUIDE, RATCHET	D12	30	6
[H]			
HANDLE ASSY., L. UPPER	H3	76	6
HANDLE ASSY., R. UPPER	H3	76	5
HANDLE COMP., L. UPPER	H3	76	11
HANDLE COMP., R. UPPER	H3	76	7
HARNESS ASSY., CONTROL WIRE	F1	42	6
	F3	44	7
	F5	46	6
	F7	48	6
	F9	50	7
	F11	52	7
	F13	54	3
	F14	55	3
	F16	57	4
	G2	59	3
HARNESS ASSY., ENGINE WIRE	E5	39	6
HARNESS ASSY., GENERATOR WIRE	G4	61	4
HEAD COMP., CYLINDER	D1	19	1
HOLDER, BRUSH	E6	40	12
HOLDER, GOVERNOR WEIGHT	D5	23	6
HOUSING, FR.	G13	70	5
HOUSING, RR.	G13	70	6
[I]			
INSULATOR	E6	40	14
INSULATOR, CARBURETOR	D15	33	15
	E2	36	13
INSULATOR, CONTROL BASE	E7	41	12
INSULATOR, MUFFLER PROTECTOR	G8	65	14
INSULATOR, RR. PANEL	G11	68	20
INSULATOR, R. SIDE PANEL	G11	68	21
[J]			
JET SET, PILOT, #40	E2	36	23
JET SET, PILOT, #45	E1	35	50
JET, MAIN, #100	E1	35	49
JET, MAIN, #102	E1	35	49
	E2	36	22
JET, MAIN, #105	E2	36	22
JET, MAIN, #98	D16	34	49
	E2	36	22
JOINT, ROD	D15	33	22
[K]			
KEY COMP.	F1	42	12
	F3	44	13
	F5	46	15
	F7	48	12
	F9	50	14
	F11	52	15
KEY, SPECIAL WOODRUFF, 25X18	E3	37	6
[L]			
LABEL, OIL ALERT	G16	73	11
LENS ASSY., PROTECTOR	F2	43	17
	F3	44	17
	F6	47	22
	F7	48	17
	F9	50	19
	F11	52	19
LEVER, CHOKE	D15	33	21
LEVER, COCK	G9	66	5
LIFTER, VALVE	D8	26	5
[M]			
MARK, CAUTION	G15	72	5
MARK, CAUTION VOLTAGE	G16	73	10
MARK, DIRECTION	G16	73	7
MARK, EX. CAUTION	G16	73	12
			13
MARK, FR. EMBLEM	G16	73	8
MARK, FUSE	G15	72	4
MARK, HONDA	G16	73	12
MARK, HOT CAUTION	G16	73	23
MARK, L. EMBLEM	G15	72	3

5

PART NAME INDEX

J 3

Part name	Address	Page	Ref.
MARK, OIL CHECK	G16	73	15
MARK, OPERATION	G16	73	9
MARK, PANEL	F1	42	9
	F3	44	10
	F5	46	11
	F7	48	9
	F9	50	11
	F11	52	13
	F13	54	8
	F14	55	10
	F16	57	13
	G2	59	10
MARK, RECYCLE	G16	73	24
MARK, R. EMBLEM	G15	72	2
MARK, SPEC	G15	72	6
	G16	73	6
MARK, VOLT	G15	72	1
METER ASSY., FUEL	G9	66	9
METER ASSY., VOLT	F1	42	14
	F6	47	19
	F7	48	14
	F9	50	16
	F11	52	16
MOTOR UNIT, STARTER	E6	40	4
MOUNT, VOLT CHANGE SWITCH	F6	47	18
	F14	55	15
MUFFLER COMP.	G7	64	1
	G8	65	1
[N]			
NOZZLE, MAIN	D15	33	11
	E2	36	10
NUT-WASHER, 6MM	E6	40	19
NUT, BATTERY TERMINAL	G12	69	11
			12
NUT, FLANGE, 10MM	D3	21	11
	G10	67	12
NUT, FLANGE, 4MM	F2	43	27
	F6	47	31
	F8	49	27
NUT, FLANGE, 6MM	D16	34	45
	E2	36	20
	E7	41	10
	G10	67	10
	G12	69	16
			17
NUT, FLANGE, 8MM	G7	64	11
	G8	65	10
	G10	67	11
	H2	75	6
	H3	76	13
NUT, HEX., 5MM	F12	53	30
	F15	56	25
	G1	58	26
	G2	59	22
	G14	71	23
NUT, HEX., 6MM	F2	43	21
	F4	45	21
NUT, HEX., 6MM	F6	47	26
	F8	49	21
	F10	51	23
	F11	52	23
	F13	54	15
	F14	55	20
	F16	57	20
	G2	59	17
NUT, PIVOT ADJUSTING	D9	27	17
NUT, SPECIAL, 16MM	E3	37	5
[O]			
OIL SEAL, 35X52X8	D3	21	8
	D5	23	11
OIL SEAL, 8X14X5	D3	21	9
O-RING, 14MM	D3	21	10
O-RING, 26X2.7	D5	23	12
[P]			
PACKING	E6	40	17
	F11	52	11
	F14	55	8
	F16	57	11
	G2	59	8
PACKING, AIR CLEANER	D16	34	26
	E2	36	17
PACKING, CARBURETOR	D15	33	17
	E2	36	16
PACKING, CARBURETOR INSULATOR	E2	36	14
PACKING, CASE COVER	D5	23	2
PACKING, FUEL FILLER CAP	G9	66	10
PACKING, FUEL STRAINER CUP	G9	66	2
PACKING, HEAD COVER	D1	19	7
PACKING, INSULATOR	D15	33	18
PACKING, RECEPTACLE	F9	50	9
	F11	52	10
	F13	54	6
	F14	55	7
	F16	57	9
			10
	G2	59	7
PANEL ASSY., RR.	G11	68	18
PANEL ASSY., R. SIDE	G10	67	16
PANEL COMP., CONTROL	F1	42	8
	F3	44	9
	F5	46	10
	F7	48	8
	F9	50	10
	F11	52	12
	F13	54	7
	F14	55	9
	F16	57	12
	G2	59	9
PANEL, RR.	G11	68	19
PIN, GOVERNOR WEIGHT	D5	23	7
PIN, LOCK, 10MM	D3	21	13
PIN, PISTON	D7	25	3
PIN, SPLIT, 4.0X28	H2	75	8
	H3	76	15
PIN, SPRING, 2X12	E2	36	21
PIPE, EX.	G7	64	5
	G8	65	4
PISTON	D7	25	2
PIVOT, ROCKER ARM	D8	26	6
PLATE SET, CONSENT	F3	44	3
	F9	50	3
	F11	52	3
	F13	54	1
	F14	55	1
	F16	57	1
			2
	G2	59	1
PLATE, BATTERY GUARD	G12	69	1
PLATE, BATTERY SETTING	G12	69	2
PLATE, FRICTION	D12	30	5
PLATE, FUEL INDICATION	G16	73	14
PLATE, LOCK	H2	75	5
PLUG ASSY.	H1	74	3
			4
PLUG ASSY., CONSENT	H1	74	1
			2
PLUG, SPARK	D1	19	14
PROTECTOR ASSY., MUFFLER INNER	G8	65	13
PROTECTOR COMP., MUFFLER OUTER	G7	64	2
	G8	65	2
PROTECTOR, CIRCUIT	F2	43	16
	F3	44	16
	F6	47	21
	F7	48	16
	F9	50	18
	F11	52	18
	F13	54	12
	F14	55	17
	F16	57	17
	G2	59	14
PROTECTOR, MUFFLER INNER	G7	64	3
PULLEY, RECOIL STARTER	D13	31	3
PULLEY, STARTER	E3	37	2
[R]			
RATCHET, STARTER	D12	30	4
	D13	31	4
RECEPTACLE	F1	42	7
	F5	46	7
			8
			9
	F9	50	8
	F11	52	8
			9
	F13	54	5
	F14	55	5
			6
	F16	57	6
			7
			8

PART NAME INDEX

J 4

Part name	Address	Page	Ref.
RECEPTACLE	G2	59	5
			6
RECTIFIER COMP., REGULATOR	F1	42	5
	F3	44	6
	F5	46	5
	F7	48	5
	F9	50	6
	F11	52	6
REEL, RECOIL STARTER	D12	30	3
RETAINER, EX. VALVE SPRING	D8	26	12
RETAINER, IN. VALVE SPRING	D8	26	11
			12
RETAINER, SPRING	D13	31	8
RING SET, PISTON	D7	25	1
ROD ASSY., CONNECTING	D7	25	4
ROD COMP., PUSH	D8	26	3
ROD, CHOKE	D15	33	23
ROD, CHOKE CONTROL	D16	34	28
ROD, GOVERNOR	E7	41	2
ROD, PUSH	D8	26	3
ROPE, RECOIL STARTER	D12	30	11
	D13	31	10
ROTATOR, VALVE	D8	26	14
ROTOR COMP.	G13	70	4
RUBBER, BOTTOM	G10	67	6
			7
RUBBER, BUMP STOPPER	G10	67	8
RUBBER, FUEL	G9	66	16
RUBBER, FUEL TANK MOUNTING	G10	67	3
RUBBER, TANK CUSHION	G9	66	15
[S]			
SCREEN, FUEL STRAINER	D15	33	13
	E2	36	12
SCREW-WASHER, 4X6	E6	40	16
SCREW-WASHER, 5X12	D16	34	44
SCREW-WASHER, 5X16	F14	55	23
	G1	58	24
	G2	59	20
SCREW-WASHER, 5X32	E6	40	18
SCREW SET	D15	33	5
			7
	E2	36	5
			7
SCREW SET, DRAIN	D15	33	6
	E2	36	6
SCREW, CENTER	D13	31	12
SCREW, FLAT, 4X16	F10	51	27
	F12	53	27
	F13	54	17
	F16	57	22
SCREW, FLAT, 4X20	F4	45	25
SCREW, FLAT, 5X10	G9	66	18
SCREW, FLAT, 5X16	F12	53	28
	F14	55	22
	F16	57	23
	G2	59	19
SCREW, METER VISOR SETTING	G11	68	22
SCREW, OVAL	G9	66	1
SCREW, PAN, 3X16	F2	43	24
	F4	45	24
	F6	47	29
	F8	49	24
	F10	51	26
	F12	53	26
SCREW, PAN, 3X5	F2	43	23
	F4	45	23
	F6	47	28
	F8	49	23
	F10	51	25
	F12	53	25
	F13	54	16
	F14	55	21
	F16	57	21
	G2	59	18
SCREW, PAN, 4X10	F2	43	25
	F8	49	25
SCREW, PAN, 5X12	D16	34	43
	G14	71	19
SCREW, PAN, 5X35	E7	41	9
SCREW, SETTING	D12	30	12
SCREW, TAPPING, 4X8	G7	64	10
SCREW, TAPPING, 5X10	G11	68	23
SCREW, TAPPING, 5X12	F2	43	26
	F4	45	26
	F6	47	30
	F8	49	26
	F10	51	28
	F12	53	29
	F13	54	18
	F15	56	24
	G1	58	25
	G2	59	21
	G13	70	16
	G14	71	18
SCREW, TAPPING, 5X14	G13	70	17
SCREW, TAPPING, 5X18	G14	71	21
SCREW, TAPPING, 5X8	G8	65	9
SCREW, THROTTLE STOP	D15	33	9
	E2	36	9
SCREW, TRUSS, 6X18	F2	43	18
	F3	44	18
	F6	47	23
	F7	48	18
	F10	51	20
	F11	52	20
	F13	54	21
	F15	56	29
	G1	58	30
	G3	60	26
SCREW, TRUSS, 6X30	F2	43	19
	F3	44	19
	F6	47	24
	F7	48	19
	F10	51	21
	F11	52	21
	F13	54	22
SCREW, TRUSS, 6X30	F15	56	30
	G1	58	31
	G3	60	27
SEAL	G11	68	17
SEAL, AIR CLEANER CASE	G6	63	7
SEAL, AIR CLEANER COVER	G6	63	9
SEAL, CHOKE LEVER	D16	34	35
SEAL, FUEL TANK	G9	66	29
SEAL, MUFFLER PROTECTOR	G7	64	4
SEAL, VALVE STEM	D8	26	1
SEAT, VALVE SPRING	D8	26	13
SHAFT COMP., L. WHEEL	H2	75	3
SHAFT COMP., R. WHEEL	H2	75	2
SHAFT COMP., WHEEL	H3	76	2
SHAFT, GOVERNOR ARM	D3	21	2
SHEET, HARNESS	G4	61	2
SHROUD	D14	32	2
SLIDER, GOVERNOR	D5	23	8
SOCKET	F3	44	8
	F7	48	7
SPACER COMP., CARBURETOR	D15	33	16
	E2	36	15
SPRING, AIR CLEANER CASE LID	G6	63	5
SPRING, BRUSH RETURN	E6	40	10
SPRING, CONTROL ADJUSTING	E7	41	6
SPRING, FRICTION	D12	30	7
	D13	31	5
SPRING, GOVERNOR	E7	41	3
SPRING, MANUAL CHOKE	D15	33	25
SPRING, RATCHET	D13	31	7
SPRING, RECOIL STARTER	D12	30	8
SPRING, RETURN	D12	30	9
SPRING, STARTER RETURN	D13	31	6
SPRING, THROTTLE RETURN	E7	41	4
SPRING, VALVE	D8	26	10
SPRING, WEIGHT RETURN	D8	26	7
STAND COMP.	H3	76	4
STARTER ASSY., RECOIL	D12	30	1
	D13	31	1
STATOR ASSY.	G13	70	2
STAY ASSY., MANUAL CHOKE	D15	33	19
STAY COMP., DIAPHRAGM	D15	33	20
STAY COMP., MUFFLER	G7	64	8
STAY, AIR CLEANER	G6	63	4
STAY, MUFFLER	G8	65	6
STOPPER, CHOKE ROD	D15	33	24
STRAINER, FUEL	G9	66	4
SWITCH ASSY., COMBINATION	F1	42	11
	F3	44	12
	F5	46	14
	F7	48	11
	F9	50	13
	F11	52	14
SWITCH ASSY., ENGINE STOP	F1	42	13
	F3	44	14
	F5	46	16
	F7	48	13
	F9	50	15
	F13	54	10

PART NAME INDEX

Part name	Address	Page	Ref.
SWITCH ASSY., ENGINE STOP	F14	55	13
	F16	57	15
	G2	59	12
SWITCH ASSY., OIL LEVEL	D3	21	4
SWITCH ASSY., VOLT CHANGE	F5	46	17
	F14	55	14
[T]			
TANK COMP., FUEL	G9	66	7
TERMINAL SET, EARTH	F1	42	3
	F3	44	4
	F5	46	3
	F7	48	3
	F9	50	4
	F11	52	4
	F13	54	2
	F14	55	2
	F16	57	3
	G2	59	2
TERMINAL, D.C. OUTPUT	F1	42	1
			2
	F3	44	1
			2
	F5	46	1
			2
	F7	48	1
			2
	F9	50	1
			2
	F11	52	1
			2
TERMINAL, VOLT CHANGE	G13	70	1
TIE, CABLE	G4	61	7
	G13	70	13
	G14	71	25
TUBE, 3.5X75	D16	34	48
TUBE, BREATHER	G6	63	1
TUBE, DIAPHRAGM	D16	34	31
TUBE, FUEL	G9	66	13
TUBE, FUEL TANK	G9	66	12
[V]			
VALVE ASSY., SOLENOID	D15	33	14
VALVE SET, FLOAT	D15	33	2
	E2	36	2
VALVE, DASHPOT CHECK	D16	34	32
VALVE, EX.	D8	26	9
VALVE, IN.	D8	26	8
[W]			
WASHER COMP., HEAD COVER	D1	19	10
WASHER, 10.5MM	G14	71	24
WASHER, 4MM	F2	43	22
	F4	45	22
	F6	47	27
	F8	49	22
WASHER, 4MM	F10	51	24
	F12	53	24
WASHER, 6MM	G9	66	14
WASHER, 8.2X17X0.8	D3	21	7
WASHER, CHOKE LEVER	D16	34	34
WASHER, DRAIN PLUG, 12MM	D3	21	12
WASHER, FRAME JOINT	G12	69	14
WASHER, PLAIN, 20MM	H2	75	7
	H3	76	14
WASHER, PLAIN, 5MM	D16	34	46
	G14	71	28
WASHER, PLAIN, 6MM	D5	23	13
	F2	43	28
	F4	45	27
	F6	47	32
	F8	49	28
	F10	51	29
	F12	53	31
	F13	54	19
	F15	56	26
	G1	58	27
	G2	59	23
WASHER, SPRING, 5MM	F12	53	32
	F15	56	27
	G1	58	28
	G3	60	24
	G14	71	29
WASHER, SPRING, 6MM	F2	43	29
	F4	45	28
	F6	47	33
	F8	49	29
	F10	51	30
	F12	53	33
	F13	54	20
	F15	56	28
	G1	58	29
	G3	60	25
WASHER, THRUST, 16.1MM	D9	27	18
WASHER, THRUST, 2.7X8	D16	34	36
WEIGHT, BALANCER	D6	24	2
WEIGHT, GOVERNOR	D5	23	5
WHEEL COMP.	H2	75	4
WHEEL COMP., 254X63.5	H3	76	3
WHEEL KIT	H2	75	1
	H3	76	1
WIRE, WATER COVER	E6	40	13
WRENCH, PLUG	H1	74	5
[Y]			
YOKE COMP.	E6	40	9

1 FOREWORD INDEX

2 ENGINE GROUP

3 FRAME GROUP

4 PART NUMBER INDEX

5 PART NAME INDEX

Pièces Box.fr

HONDA

The Power of Dreams

Pièces Box.fr

E.Y A 20.2010.10

Published by Honda Motor Co., Ltd.
Printed in Japan