Flymo

MODEL	Venturer Turbo 420 XLP
PRODUCT NO.	9644305, 9644313

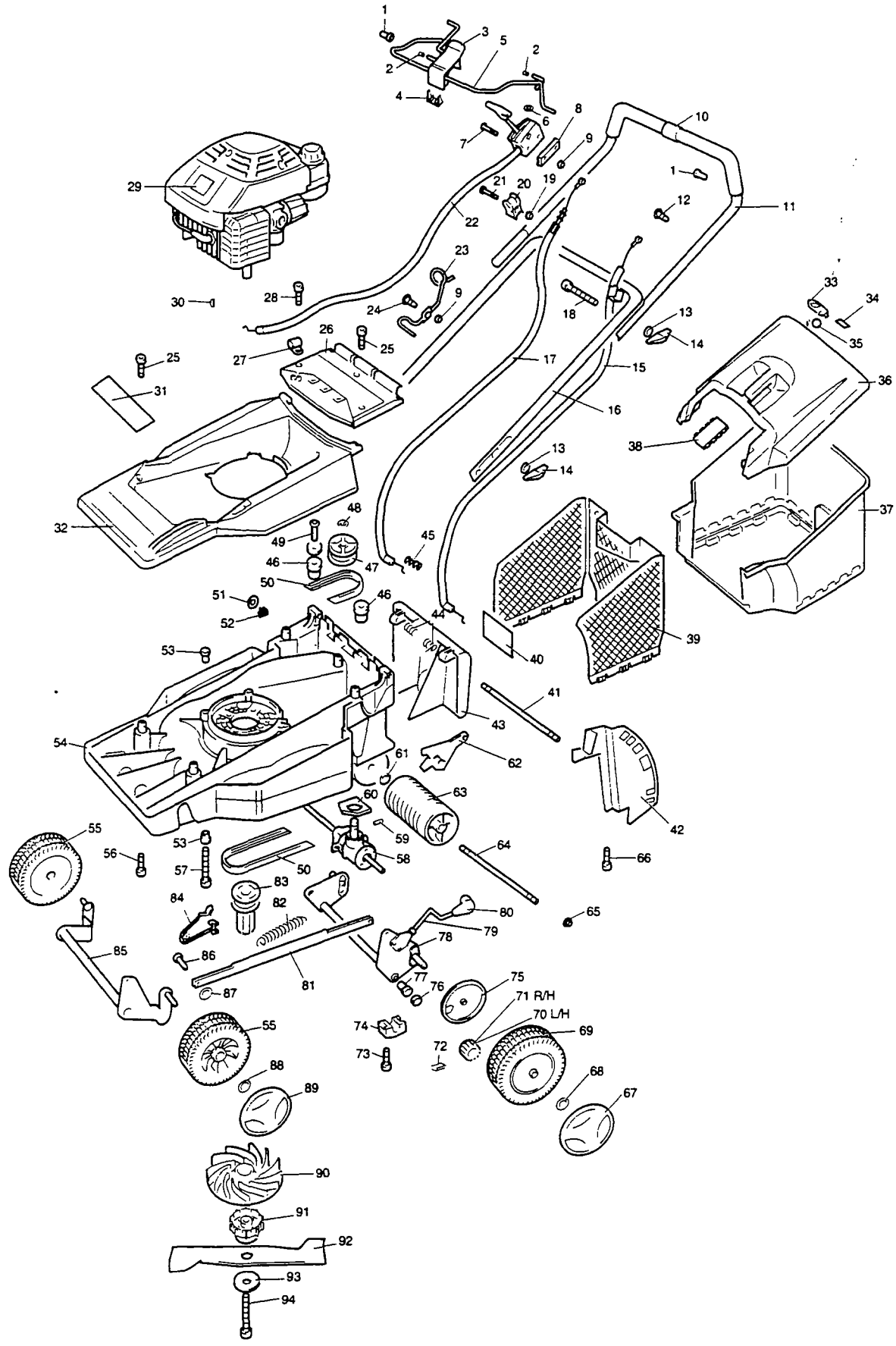

Flymo

MODEL	Venturer Turbo 420 XLP
PRODUCT NO.	9644305, 9644313

KEY	PART NUMBER	DESCRIPTION	QTY
01	5148503-00/5	INSULATING BUSH	2
02	5146476-00/6	KNOB	3
03	5117868-00/9	TOGGLE	1
04	5127403-00/3	RETAINER,TOGGLE	1
05	5117874-00/7	DUAL LEVER	1
06	5149275-00/9	SPACER	1
07	5148636-00/3	BOLT	2
08	5126881-00/1	CLUTCH CABLE ANCHORAGE	1
09	5148637-00/1	NUT	3
10	5138268-00/7	CLIP	1
11	5127425-02/2	HANDLE & GRIP	1
12	5149246-00/0	SCREW	1
13	5149275-01/7	SPACER	4
14	68570-07/6	WING KNOB	4
15	5138254-00/7	BRAKE CABLE	1
16	5127411-00/6	HANDLE LOWER	1
17	5138275-00/2	CLUTCH CABLE	1
18	5148510-00/0	BOLT,NIBBED	2
19	5149286-00/6	WING NUT	1
20	5138297-00/6	UPPER GUIDE	1
21	5149287-00/4	BOLT	1
22	5126883-07/2	THROTTLE CONTROL	1
23	5138296-00/8	LOWER GUIDE	1
24	5148636-02/9	BOLT-PAN HEAD	1
25	5146824-00/7	SCREW	5
26	5106603-01/1	ACCESS PANEL	1
27	5148709-01/6	'P' CLIP	1
28	5146941-00/9	SCREW	1
29	5149250-00/2	LABEL,ENGINE COWL	1
30	5140053-00/9	KEY	1
31	5149283-00/3	LABEL,FLYMO	1
32	5106609-01/8	BASE COWLING	1
33	5127377-00/9	INDICATOR COVER	1
34	5149233-00/8	LABEL,GRASSBOX	1
35	5149277-00/5	BALL,YELLOW	1
36	5138310-00/7	GRASSBOX TOP	1
37	5106589-00/4	GRASSBOX LOWER	1
38	5127397-00/7	COVER PLATE	1
39	5106591-00/0	SCREEN	1
40	5146485-00/7	LABEL,WARNING	1
41	5138237-00/2	TIE BAR	1
42	5126867-00/0	QUADRANT	1
43	5106590-00/2	SAFETY FLAP	1
44	5137845-00/3	SPRING,RETURN	2
45	5138305-00/7	SPRING,CLUTCH	1
46	5148509-00/2	GUIDE BUSH	3
47	5137891-00/7	PULLEY	1
48	5148526-00/6	CIRCLIP	1
49	5148528-00/2	PLASTIC RIVET	3
50	5126882-01/7	DRIVE BELT	1
51	5148825-00/2	PUSH-ON-FIX	1
52	5137801-00/6	CLIP,AXLE	1
53	5148551-00/4	BUSH INSULATOR	6
54	5106608-04/4	DECK	1
55	5127136-00/9	WHEEL	2
56	5148552-01/0	SCREW	4
57	5149167-00/8	BOLT	3
58	5127457-00/9	GEARBOX ASSY	1
59	5148478-00/0	PIN	1
60	5137798-00/4	FOAM SEAL	1
61	5140281-01/4	WASHER	1
62	5138248-00/9	INDEX PLATE	2
63	5126880-00/3	ROLLER	2
64	5137709-00/1	AXLE,ROLLER	1
65	5137802-00/4	AXLE MOUNT	1
66	5146736-00/3	SCREW	1
67	5127378-00/7	8"HUB CAP	2
68	5149108-00/2	PUSH ON FIX	2
69	5126920-00/7	DRIVE WHEEL ASSY	2
70	5138050-00/9	DRIVE SPROCKET L/H	1
71	5138050-01/7	DRIVE SPROCKET R/H	1
72	5148831-00/0	PAWL	2
73	5148519-01/9	SCREW	4
74	5137730-00/7	BRIDGE CLAMP	2
75	5126884-00/5	BACK PLATE	2
76	5140281-01/4	WASHER	2
77	5148485-00/5	AXLE BUSH	2
78	5127431-02/0	REAR AXLE SUB ASSEMBLY	1
79	5138344-00/6	HEIGHT ADJUSTER LEVER	1
80	5127382-00/9	HEIGHT ADJUSTER KNOB	1
81	5148832-00/8	LINK	1
82	5137731-00/5	SPRING,COUNTERBALANCE	1
83	5127229-00/2	DRIVE HUB	1
84	5127391-00/0	INDICATOR	1
85	5127430-00/6	FRONT AXLE FABRICATION	1
86	5148506-01/6	CLEVIS PIN	2
87	5148524-00/1	WASHER,STARLOCK	2
88	5149108-00/2	PUSH ON FIX	2
89	5127379-00/5	7"HUB CAP	2
90	5117785-00/5	IMPELLER	1
91	5127032-00/0	BLADE SPACER	1
92	5117183-00/3	BLADE 42CM	1
96	5148598-00/5	DISC SPRING	1
94	5146677-09/0	BLADE BOLT	1

PRODUCT APPLICATION

9644305-51	**GB,EI**
9644313-51	**GB,EI**

WHERE NO APPLICATION DETAILS ARE SHOWN, PART APPLIES TO ALL COUNTRIES

A Austria; AUS Australia; B Belgium; CND Canada; CH Switzerland; D Germany; DK Denmark; E Spain; EI Eire; F France; GB Great Britain; I Italy; N Norway; NL Netherlands; NZ New Zealand; O/S Overseas; P Portugal; S Sweden; SF Finland; USA America; ZA South Africa