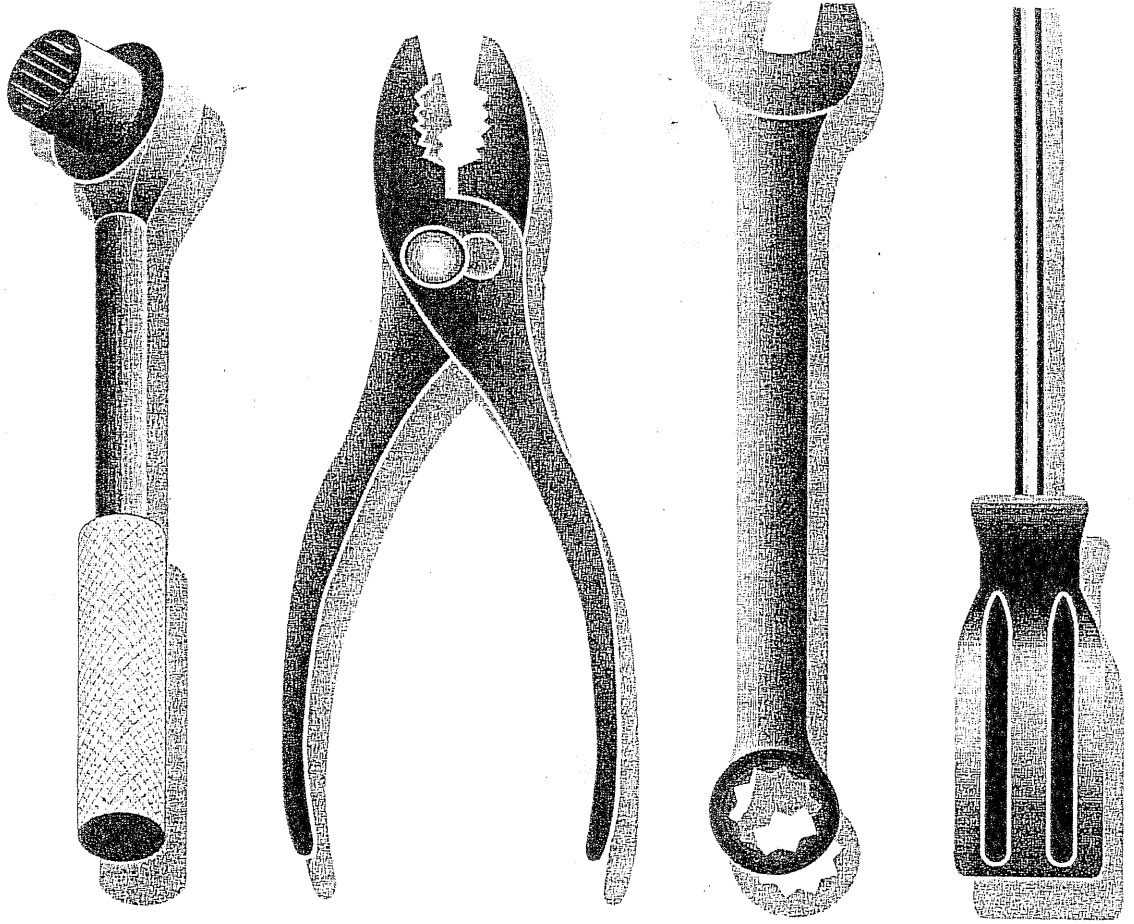

REPAIR PARTS MANUAL

MODEL NO. 259150

Lawn Tractor

CRAFTSMAN®

19 HP HYDRO 107 CM ARR

PRINTED IN U.S.A

REPAIR PARTS

ELECTRICAL

TRACTOR- -MODEL NO. 917. 259150

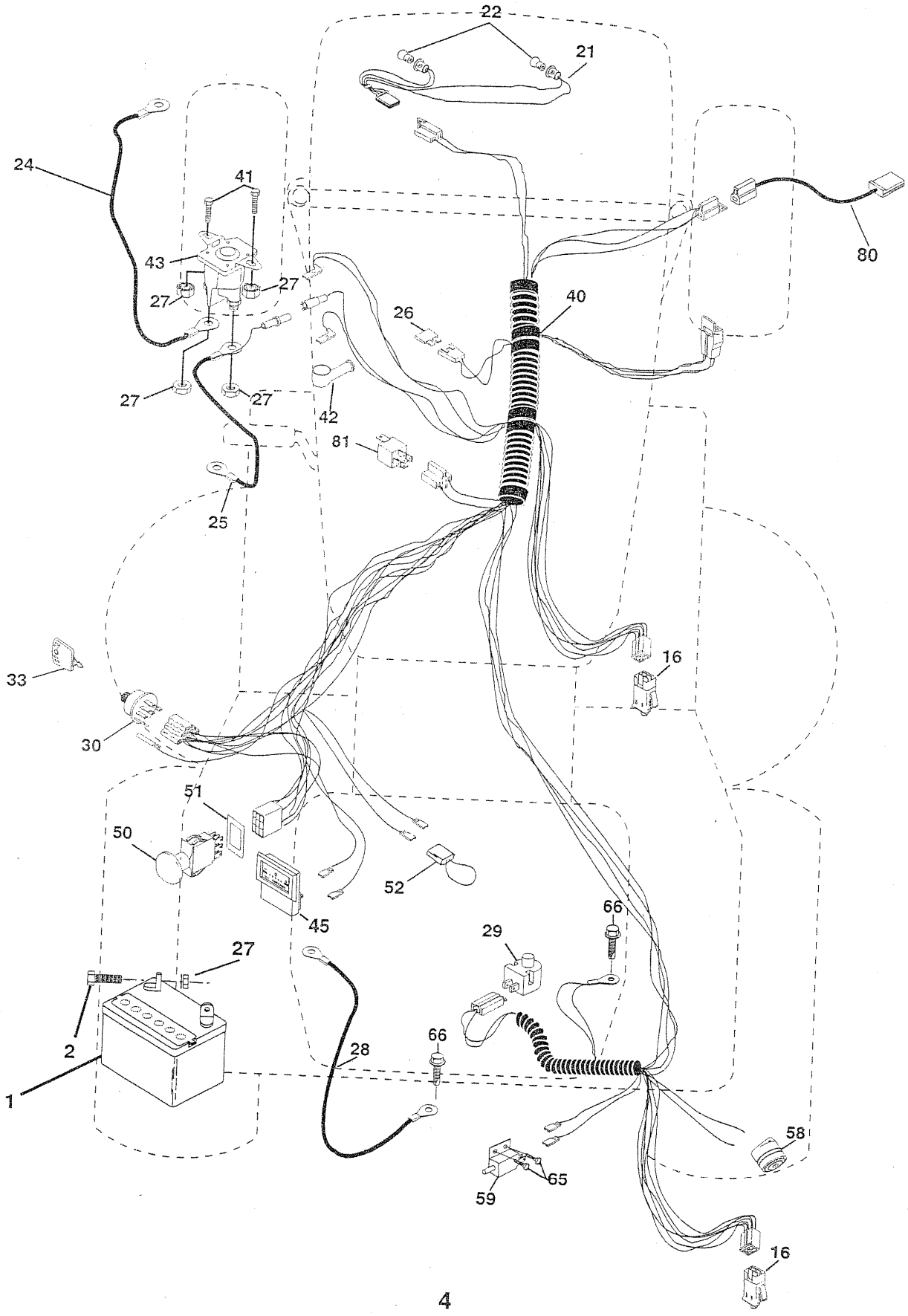

REPAIR PARTS

ELECTRICAL

TRACTOR- -MODEL NO. 917. 259150

KEY NO.	PART NO.	DESCRIPTION
1	163465	Battery
2	74760412	Bolt Hex Hd 1/4-20 Unc X 3/4
16	153664	Switch Interlock Push-In
21	166182	Harness Asm Light W/4152J
22	4152J	Bulb Light #1156
24	4799J	Cable Starter 6Ga 11" Red
25	165987	Cable Battery Crd 56" Red
26	166180	Fuse 15 Amp
27	73510400	Nut Keps Hex 1/4-20 Unc
28	127725X	Cable Ground 6Ga 18" Black
29	160784	Switch Plunger Normal Op Olive
30	163968	Switch Ignition
33	140403	Key Ign
40	170214	Harness Ign Crd Elect
41	71110408	Bolt Flk Fin Hex 1/4-20 Unc X 1/2
42	131563	Cover Terminal Red
43	145673	Solenoid
45	122822X	Ammeter Rectangular 15Amp
50	169416	Switch PTO
51	140405	Ring Retainer PTO
52	141940	Protection Wire Loop
58	169419	Buzzer Crd
59	166299	Switch FBI CRD
65	17211008	Screw Slftp #10-16 x 1/2 Ty-Ab
66	17490608	Screw Thdrol 3/8-16 x 1/2 Ty-Tt
80	146685	Harness Clutch EVX
81	109748X	Relay Asm

NOTE: All component dimensions given in U.S. inches. 1 inch = 25.4 mm.

REPAIR PARTS

TRACTOR- -MODEL NO. 917.259150

CHASSIS AND ENCLOSURES

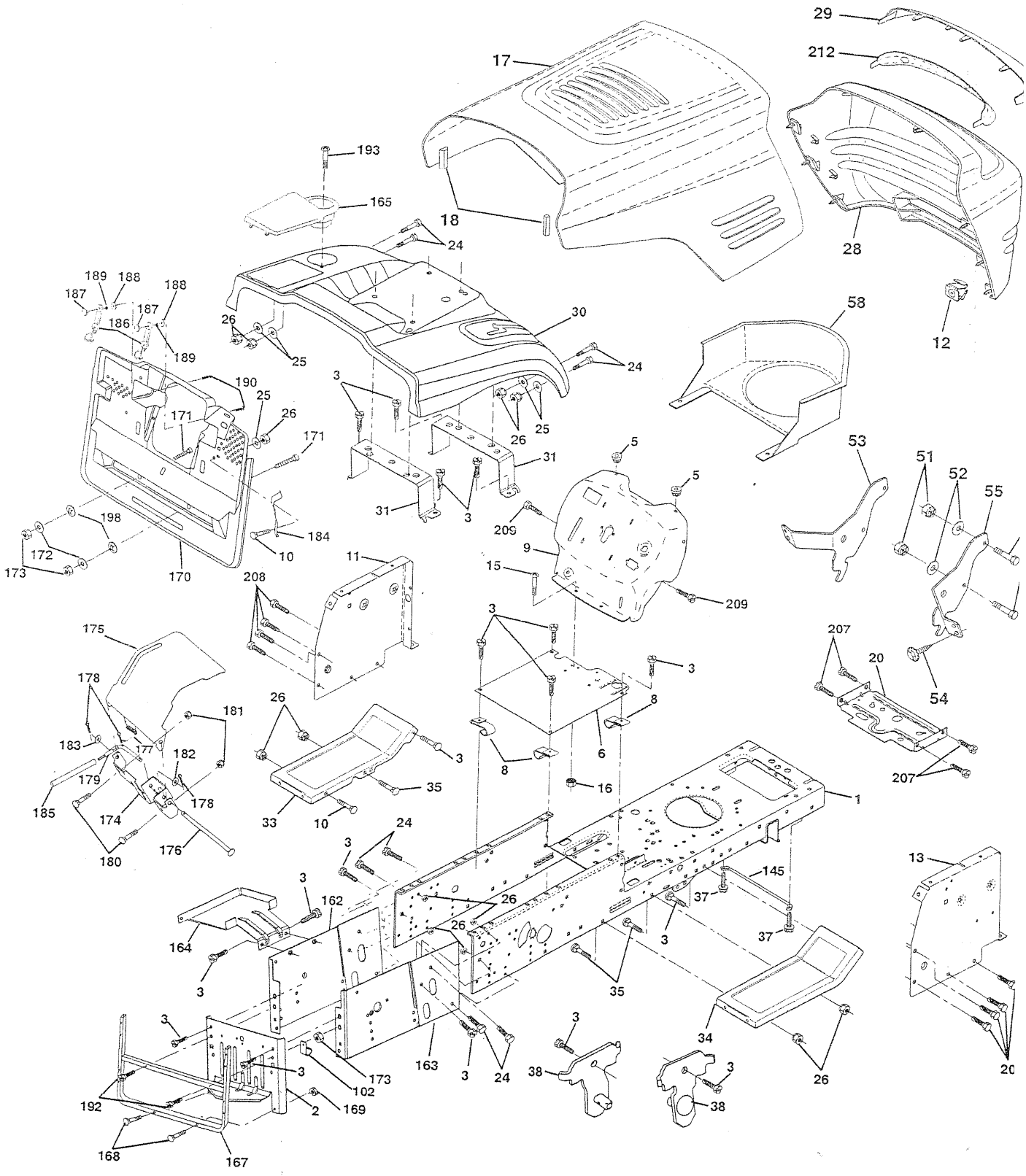

REPAIR PARTS

TRACTOR- -MODEL NO. 917.259150

CHASSIS AND ENCLOSURES

KEY NO.	PART NO.	DESCRIPTION
1	169831	Chassis Assembly
2	165606	Drawbar
3	17060612	Screw 3/8-16 x .75
5	155272	Bumper Hood/Dash
6	155923	Saddle
8	126471X	Clip Insulator 13/32 Mtg. Hole
9	168352X010	Dash
10	72140608	Bolt, Carriage 3/8-16 x 3/4
11	155927	Panel, Dash, L.H.
12	145660	Clip, Tinnerman Grille P/L
13	172108	Panel, Asm. Dash R.H.
15	74180512	Screw, Machine, Truss Head 5/16-18 UNC x 3/4
16	73510500	Nut
17	144983X558	Hood Assembly
18	126938X	Bumper Hood
20	156437	Plate Mtg. Battery/Fuel Tank
24	74780616	Bolt
25	19131312	Washer 13/32 x 13/16 x 12 Gauge
26	73800600	Nut
28	156725X558	Grille
29	155217X599	Lens, Grille
30	165713X558	Fender
31	165156	Bracket, Fender Support
33	145244X558	Footrest, L.H.
34	145243X558	Footrest, R.H.
35	72110606	Bolt
37	17490508	Screw Thdrol 5/16-18 x 1/2 TYT
38	169834	Pivot Bracket Assembly
51	73800400	Nut Lock w/Insert 1/4-20 UNC
52	19091416	Washer 9/32 x 7/8 x 16 Ga.
53	145201	Bracket, Grille LH
54	161464	Screw Hex WSHD 8-18 x 7/8
55	145202	Bracket, Grille RH
57	74780412	Bolt, Fin Hex 1/4-20 UNC x .75
58	140547	Air Duct
102	2751R	Clip line Fule 13/32 Mtg Hole
145	156524	Rod Pivot Chassis/Hood
162	165672	Bracket Exten Chassis Lh CRD
163	165673	Bracket Exten Chassis Rh CRD
164	165605	Support Battery CRD
165	165742X428	Cover Battery CRD Lt
167	165779	Support Asm. Backplate WLDMNT
168	72050412	Bolt, RDHD SHT NK 1/4-20 x 1-1/2
169	123976X	Nut, Lock 1/4 LGE FLG Gr. 5 Zinc
170	165607	Cover, Backplate Plastic Black
171	74520640	Bolt Hex 3/8-16 x 2-1/2 Gr. 5
172	19132016	Washer 13/32 x 1-1/4 x 16 Ga.
173	73510600	Nut, Keps Hex 3/8-16 UNC
174	165939	Bracket Switch FBI CRD
175	166212	Guard Door Rear CRD
176	128600	Pin Hinge Pivot
177	132796	Spring Bagger Top LH Black
178	76020312	Pin Cotter 3/32 x 3/4 Cad Zinc
179	165942	Rod Pivot FBI CRD
180	74760516	Bolt Hex HD 5/16-18 UNC x 1
181	73680500	Nut Crownlock 5/16-18
182	138200	Washer .385 x .625 x 11 Ga.
183	19131316	Washer 13/32 x 13/16 x 16 Ga.
184	166139	Bracket Actuator Bagger CRD
185	165940	Tube Lever Switch FBI CRD
186	160793	Latch Asm Mulch/Bagger
187	2029J	Nut Weld .327/.304 #10-24
188	19061216	Washer #10
189	10071000	Washer Lock #10
190	71161010	Screw Truss Hd Phil 10-24 x 5/8
192	17490624	Screw Thdrol 3/8-16 x 1-1/2
193	17070412	Screw Truss 1/4-20 x 3/4
198	168937	Nut, Push
207	17670508	Screw Thdrol 5/16-18 x 1/2
208	17670608	Screw Thdrol 3/8-16 x 1/2
209	17000612	Screw Hex Wsh Thdrol 3/8-16
212	165919	Insert Lens

NOTE: All component dimensions given in U.S. inches. 1 inch = 25.4 mm.

REPAIR PARTS

DRIVE

TRACTOR- -MODEL NO. 917.259150

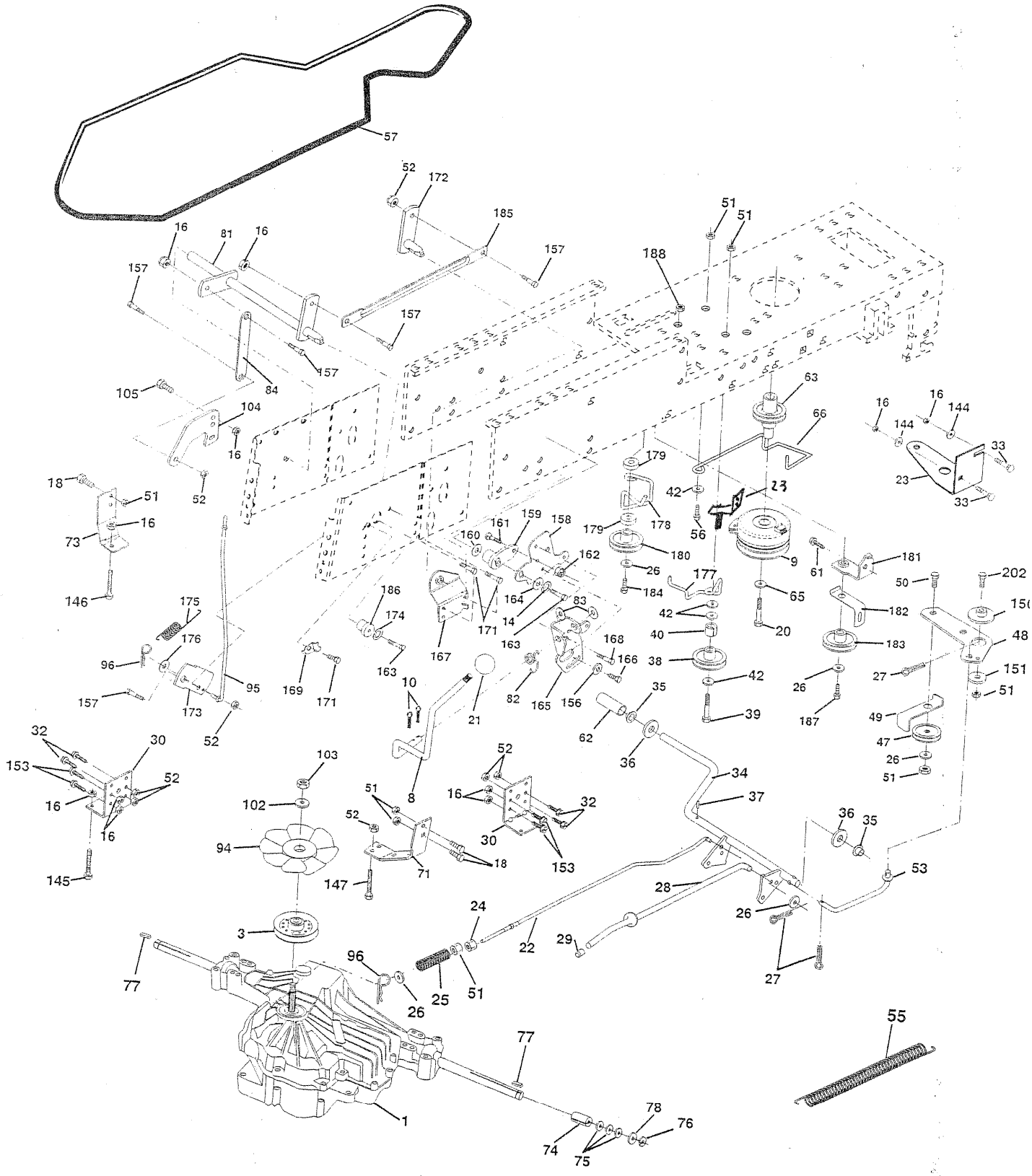

REPAIR PARTS

TRACTOR- -MODEL NO. 917.259150

DRIVE

KEY NO.	PART NO.	DESCRIPTION
1	- - - - - - -	Transaxle Hydro Gear 331-0650 (See Transaxle Breakdown)
3	143995	Pulley Hydro 0650 Lt/CRD
8	165619	Rod, Shift Fender Adjust Lt
9	169992	Clutch Ele EVX 80 W/Hard Brake
10	76020416	Pin, Cotter 1/8 x 1
14	10040400	Washer, Lock Hvy Helical
16	73800500	Nut, Lock Hex w/Ins 5/16-18 UNC
18	74780616	Bolt Hex 3/8-16 UNC x 1 Gr.5
20	150280	Bolt, Hex 7/16-20 x 4-1/4 5 Ga 1.38
21	130564	Knob
22	165688	Rod, Brake CRD 0650
23	170171	Bracket Asm Clutch Mtg. EVX
24	73350600	Nut
25	106888X	Spring, Rod, Brake
26	19131316	Washer 13/32 x 13/16 x 16 Ga.
27	76020412	Pin, Cotter 1/8 x 3/4
28	145204	Rod, Parking Brake
29	71673	Cap, Parking Brake
30	169592	Bracket, Mfg. Transaxle
32	74760512	Bolt Hex 5/16-18 UNC x 3/4
33	72140506	Bolt Rdhd Sqnk 5/16-18 Unc x 3/4
34	165496	Shaft, Asm Pedal Foot CRD
35	120183X	Bearing, Nylon
36	19211616	Washer 21/32 x 1 x 16 Ga.
37	1572H	Pin, Roll 3/16 x 1"
38	165936	Pulley Flat Composite 3.06"
39	74760644	Bolt Fin Hex
40	4470J	Spacer, Split 395 x 59 Bzp
42	19131312	Washer 13/32 x 13/16 x 12 Ga.
47	127783	Pulley, Idler, V Groove Plasitc
48	154407	Bellcrank Clutch Grnd Drv
49	123205X	Retainer, Belt Style Spring
50	74760624	Bolt Hex Hd 3/8-16 UNC x 1-1/2
51	73680600	Nut, Crownlock 3/8-16 UNC
52	73680500	Nut Crownlock 5/16-18
53	105710X	Link, Clutch 7.66
55	105709X	Spring, Return, Clutch
56	74760620	Bolt, Hex 3/8-16 UNC x 1-1/4
57	165632	V-Belt Kev 112" 0650 CRD
61	17060612	Screw 3/8-16 x .75 SMGML Tap/R
62	8883R	Cover, Pedal
63	145868	Pulley, Clutch elect EVX 1"
65	10040700	Washer
66	154778	Keeper, Belt Engine F-Proof
71	140158	Strap, Torque, Lh
73	156347	Strap, Torque, Rh
74	121199X	Spacer, Split
75	121749X	Washer 25/32 x 1-1/4 x 16 Ga.
76	12000001	Ring, E
77	123583X	Key, Square
78	121748X	Washer 25/32 x 1-5/8 x 16 Ga.
81	165585	Asm, Shaft
82	123782X	Spring, Torsion
83	19171216	Washer 17/32 x 3/4 x 16 Ga.
84	165629	Link, Transaxle
94	140462	Fan 7"
95	165935	Control Asm Bypass Hydro
96	4497H	Spring, Retainer 1"
102	141322	Washer, Bellville .50ID x 1.50D
103	73940800	Nut, Hex Jam Toplock 1/2-20 UNF
104	140156	Arm, Control Hydro
105	71070516	Screw Cap Hex 5/16 x 18 Unc-1
144	19111016	Washer 11/32 x 5/8 x 16 Ga.
145	74490540	Bolt Hex FGHD 5/16-18 x Gr 5
146	74490536	Bolt Hex FLGHD 5/16-18 x 2-1/4
147	74490524	Bolt Hex FLGHD 5/16-18 x 1-1/2
150	165850	Bushing, Bellcrank Grnd Dr
151	19133210	Washer 13/32 x 2 x 10 Ga.
153	74760516	Bolt Hex Hd 5/16-18 Unc x 1
156	166002	Washer Srrted 5/16ID x 1.125
157	153236	Bolt Shoulder 5/16-18 Unc 2A
158	165589	Bracket Shift Mount
159	165494	Hub Tapered Flange Shift Lt
160	19292016	Washer 29/32 x 1-1/4 x 16 Ga.
161	72140406	Bolt Rdhd Sqnk 1/4-20 x 3/4 Gr 5
162	73680400	Nut Crownlock 1/4-20 Unc
163	74780416	Bolt Hex Fin 1/4-20 Unc x 1 Gr 5
164	19091010	Washer 5/8 x .281 x 10 Ga.
165	165623	Bracket Pivot Lever
166	166880	Screw 5/16-18 x 5/8
167	165588	Bracket Support Shift CRD
168	165492	Bolt Shoulder 5/16-18 x .561
169	165580	Plate Fastening Lt
171	17490608	Screw Thdrol 3/8-16 x 1/2 Ty-Tt
172	165587	Shaft Asm Shifter Frt CRD 0650
173	165934	Bracket Hydro Bypass CRD
174	10090400	Washer Lock 1/4
175	165931	Spring Bypass CRD
176	19070816	Washer 7/32 x 1/2 x 16 Ga.
177	165932	Keeper Flat Idler 3.06" CRD
178	165933	Keeper Belt Idler 1.88" CRD
179	120958X	Washer Sintered
180	165630	Pulley, Idler, Flat 1.88"CRD
181	165797	Bracket Idler Ground Drive CRD
182	165634	Keeper Belt 2.5" Od V-Idler CRD
183	165626	Pulley V-Idler 2.50" Od CRD
184	17490644	Screw Hexwsh Thdrol 3/8-16 x 2-3/4
185	165541	Link Shift CRD Hydro 0650
186	165614	Hub Tapered Round CRD
187	17490620	Screw Thdrol 3/8-16 x 1-1/4 TT
188	110436X	Bushing Snap Split
202	72110612	Bolt Carr SH 3/8-16 x 1-1/2 Gr. 5

NOTE: All component dimensions given in U.S. inches
1 inch = 25.4 mm

REPAIR PARTS

STEERING ASSEMBLY

TRACTOR- -MODEL NO. 917.259150

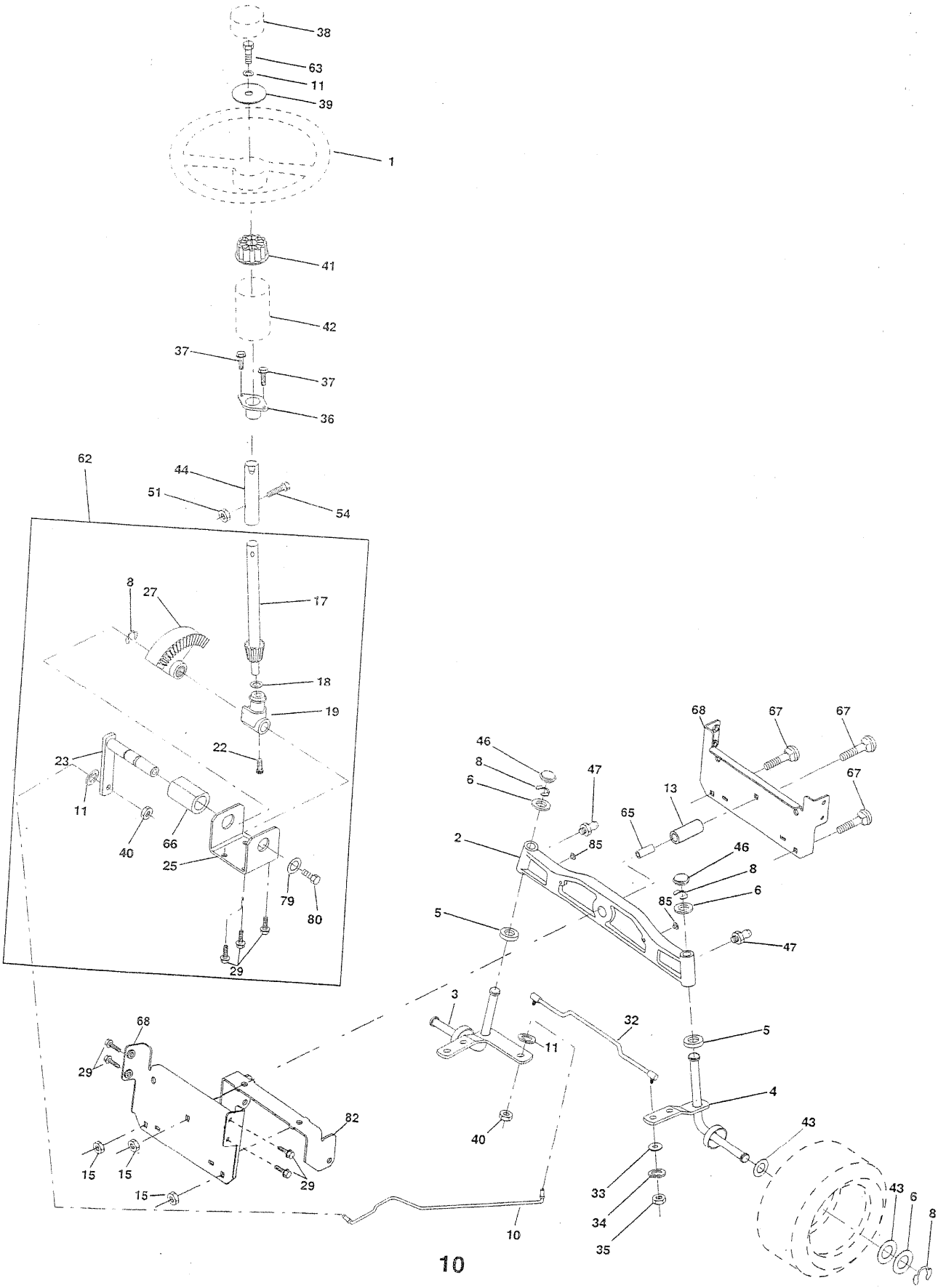

REPAIR PARTS

TRACTOR- -MODEL NO. 917.259150

STEERING ASSEMBLY

KEY NO.	PART NO.	DESCRIPTION
1	139768	Steering Wheel
2	165854	Front Axle Assembly
3	169840	Spindle Assembly, L.H.
4	169839	Spindle Assembly, R.H.
5	6266H	Bearing, Race, Thrust, Hardened
6	121748X	Washer 25/32 x 1-5/8 x 16 Gauge
8	12000029	Ring, Klip
10	169832	Link, Drag
11	10040600	Washer, Lock
13	136518	Spacer Bearing Axle
15	145212	Nut, Hexflange Lock
17	156546	Shaft Assembly, Steering
18	57079	Washer, Thrust .515 x .750 x .033
19	160395	Support, Shaft
22	165857	Screw Hex Wshhd Torx
23	165851	Pittman Shaft Assembly
25	154406	Bracket, Steering
27	136874	Gear, Sector
29	17060612	Screw, 3/8-16 x 3/4 SMGML
32	170162	Rod, Tie
33	19111216	Washer 11/32 x 3/4 x 16 Ga
34	10040500	Washer Lock 5/16
35	73810500	Nut Lock 5/16-24 Unf
36	155099	Bushing, Steering
37	152927	Screw TT #I0-32 x 5 x 3/8 Flange
38	139769	Cap Wheel Steering
39	19133812	Washer 13/32 x 2-3/8 x 12 Gauge
40	7810H	Nut Lock Center 3/8-24 Unf
41	100711L	Adaptor, Steering Wheel
42	145054X428	Boot, Steering Dash
43	121749X	Washer 25/32 x 1-1/4 x 16 Gauge
44	153720	Extension Steering Non-Adjust
46	121232X	Cap, Spindle
47	6855M	Fitting, Grease
51	73800500	Nut Lock Hx W/Ins 5/16-18 UNC
54	74780520	Bolt Fin Hex 5/16-18 UNC x 1-1/4
62	167902	Kit, Steering Assembly, Service
63	74780616	Bolt Fin Hex 3/8-16 unc. x 1 Gr. 5
65	160367	Spacer Brace Axle
66	154404	Bearing Arm Pittman
67	72110618	Bolt RDHD SQNK 3/8-16 x 2-1/4
68	169827	Brace Axle
79	19132012	Washer 13/32 x 1-1/4 x 12 Ga
80	74950612	Bolt Hex Nylon 3/8-16 x 3/4
82	169835	Bracket Susp. Chassis Front
85	133835	Fastner Christmas Tree

NOTE: All component dimensions given in U.S. inches.
1 inch = 25.4 mm.

REPAIR PARTS

SEAT ASSEMBLY

TRACTOR- -MODEL NO. 917.259150

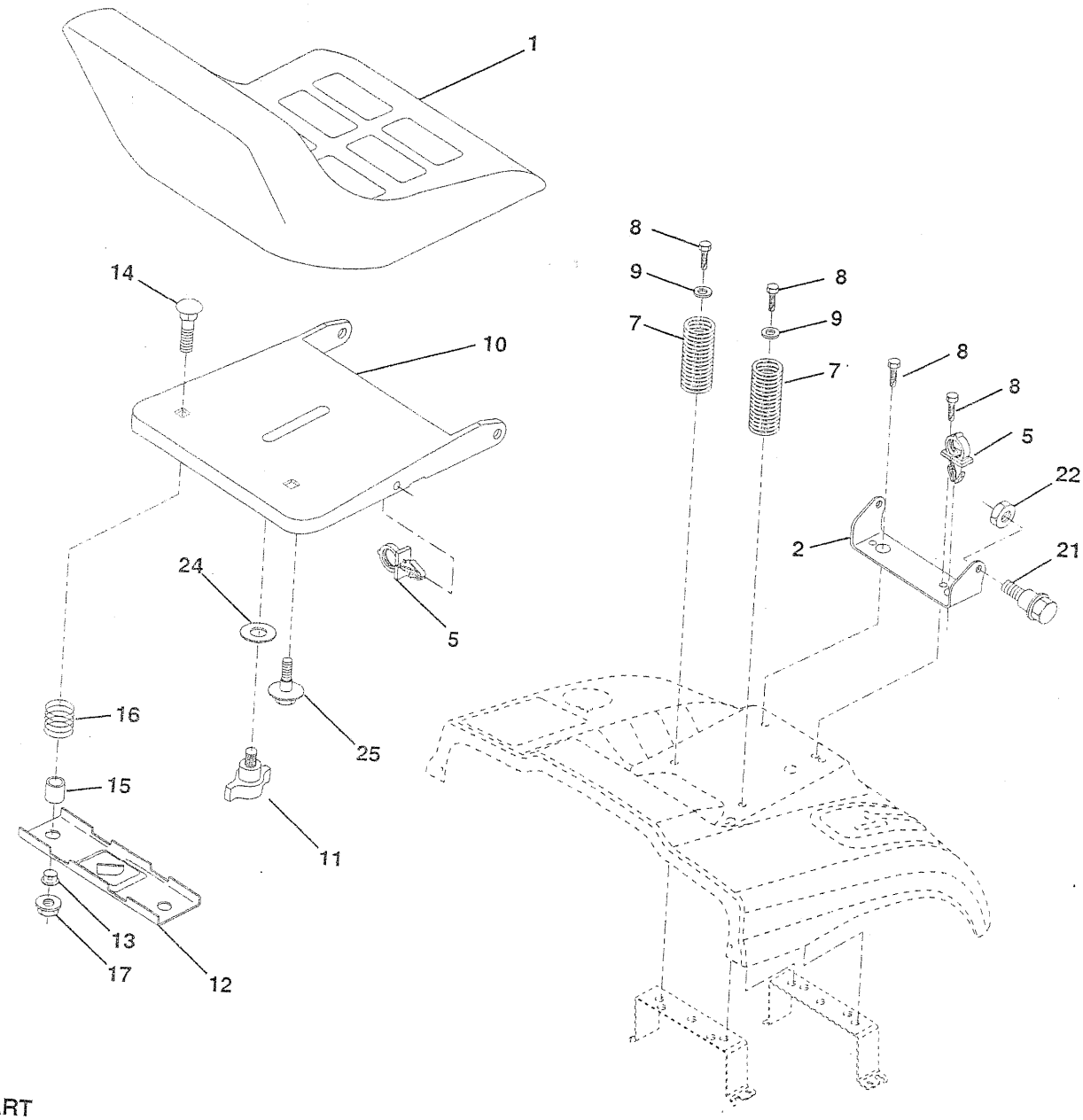

KEY NO.	PART NO.	DESCRIPTION
1	140123	Seat
2	140551	Bracket Pnt Pivot Seat (blk)
5	145006	Clip Push In Hinged
7	124181X	Spring Seat Cprsn 2 250 Blk Zi
8	17000616	Screw 3/8-16 X 1.5 SMGML Tap/R
9	19131614	Washer 13/32 X 1 X 14 Ga
10	155925	Pan Pnt Seat (blk)
11	166369	Knob Seat Adj Wingnut
12	121246X	Bracket Pnt Mounting Switch

KEY NO.	PART NO.	DESCRIPTION
13	121248X	Bushing Snap Blk Nyl 50 Id
14	72050412	Bolt Rdhd Sht Nk 1/4-20x1-1/2
15	134300	Spacer Split .28 X .96 Zinc
16	121250X	Spring Cprsn
17	123976X	Nut Lock 1/4 Lge Flg Gr 5 Zinc
21	171852	Bolt Shoulder 5/16-18 Unc-2A
22	73800500	Nut Hex Lock w/Ins 5/16-18
24	19171912	Washer 17/32 X 1-3/16 X 12 Ga.
25	127018X	Bolt Shoulder 5/16-18 X 62

NOTE: All component dimensions given in U.S. inches
1 inch = 25.4 mm

REPAIR PARTS

TRACTOR- -MODEL NO. 917.259150

DECALS

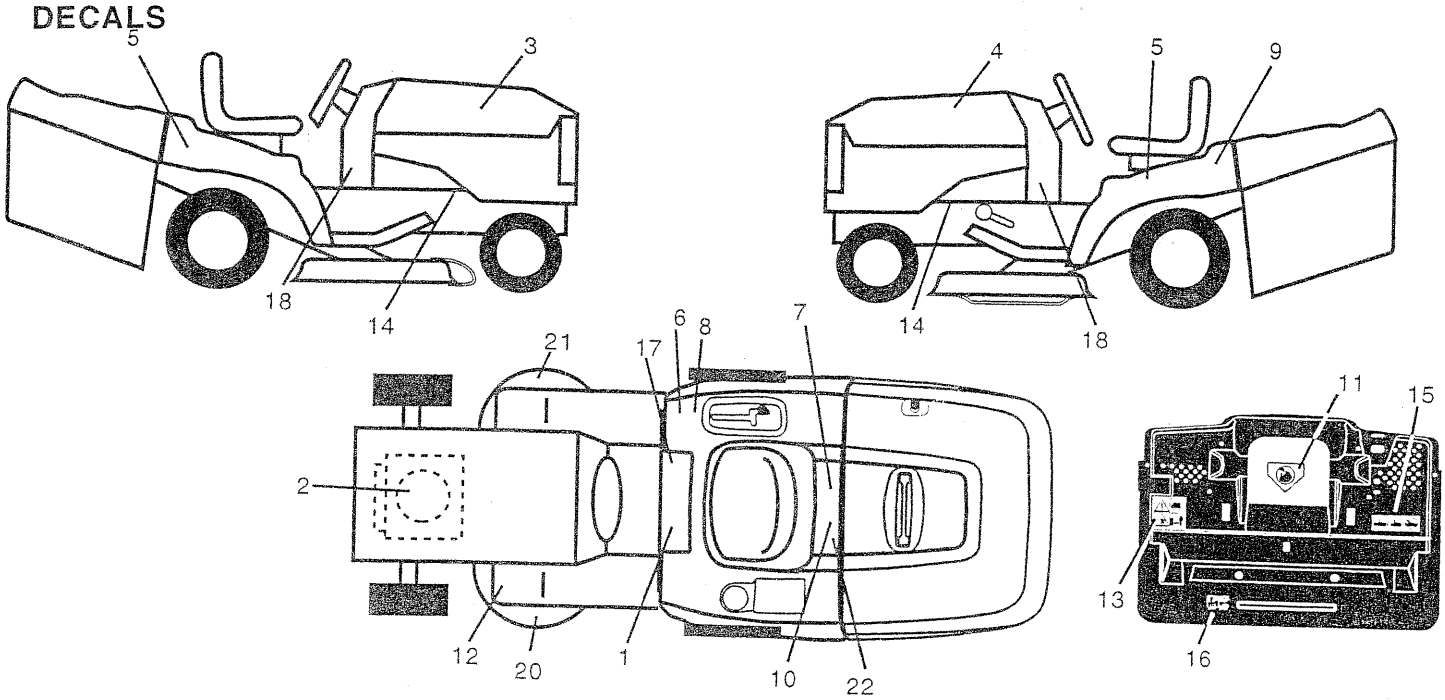

KEY NO.	PART NO.	DESCRIPTION
1	145498	Decal Read Owner's Manual Sym
2	165389	Decal Hp Engine
3	171696	Decal Hood Rh
4	171697	Decal Hood Lh
5	163227	Decal Fender Auto
6	126187X	Decal 100 DBA
7	166960	Decal Bypass Fender
8	145437	Decal Europe Stand Ce
9	163204	Decal Fender Lh
10	145005	Decal Bat Dan/Poi P/L Sym Wpn
11	145494	Decal Mower Cut Finger Symbol
12	159737	Decal Brake/Clutch Symbol Lt
13	166959	Decal Warn Back Plate CRD
14	159736	Decal Chassis Hot Muffler
15	166961	Decal Oper Bag Presence CRD
16	162598	Decal Drawbar Load Limit
17	140837	Decal Saddle Brake Parking
18	166799	Decal Dash Panel
20	133179	Decal Mower QC System
21	166286	Decal Deck Sch 92 CRD
22	138047	Decal Battery
—	138311	Decal Lift Handle
—	157199X428	Pad Footrest
—	173743	Manual Operator's (Euro)
—	173744	Manual Operator's (Scand)
—	173745	Manual Parts

WHEELS & TIRES

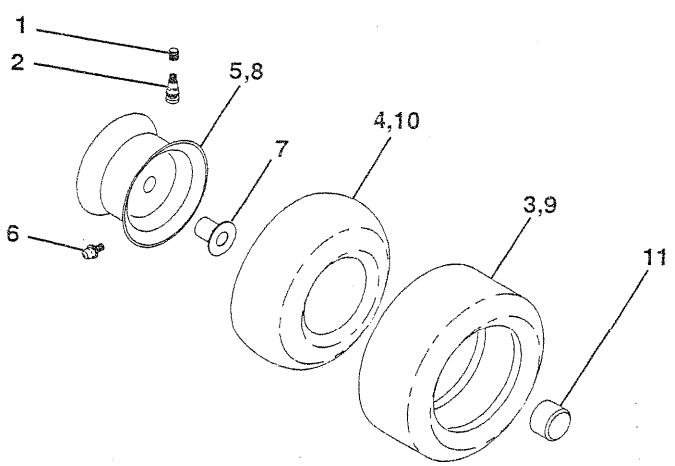

KEY NO.	PART NO.	DESCRIPTION
1	59192	Cap Value Tire
2	65139	Stem Value
3	106222X	Tire F Ts 15 X 6 0 - 6 Service
4	59904	Tube Inner Front #35060
5	106732X427	Rim Asm 6"front White Service
6	278H	Fitting Grease
7	9040H	Bearing Flange
8	106108X427	Rim Asm 8" rear White Service
9	122082X	Tire R Ts 20 x 10-8 Service
10	7152J	Tube Rear 9 5 X 8 Service
11	104757X	Cap Axle Blk 1 50 X 1 00
- -	144334	Sealant, Tire (10 oz. tube)

NOTE: All component dimensions given in U.S. inches
1 inch = 25.4 mm

REPAIR PARTS

ENGINE

TRACTOR- -MODEL NO. 917.259150

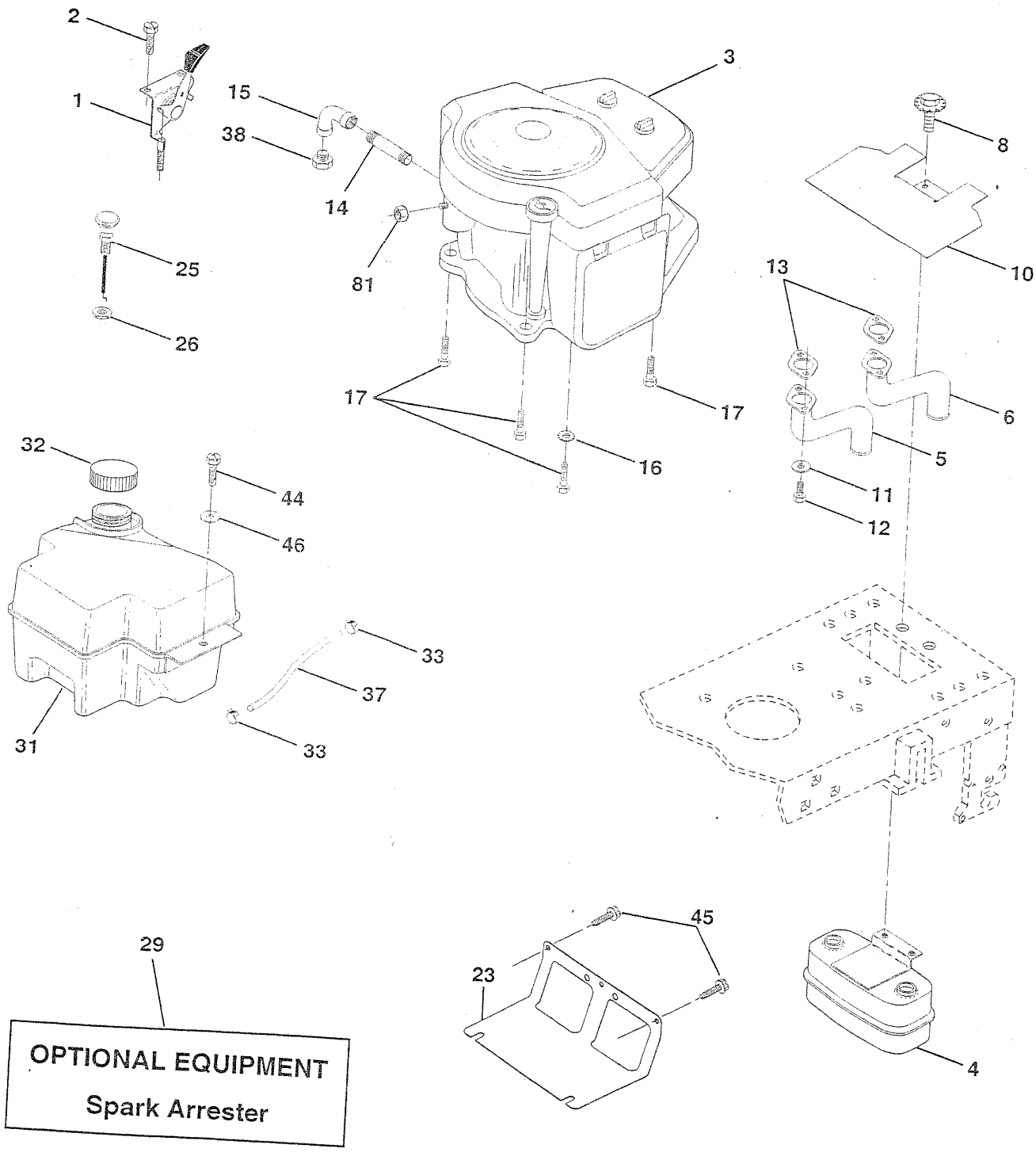

REPAIR PARTS

TRACTOR- -MODEL NO. 917.259150

ENGINE

KEY NO.	PART NO.	DESCRIPTION
1	162152	Control, Throt Paddle 32 22
2	17720410	Screw, Hex Thd Cut 1/4-20 x 5/8
3	- - - - - -	Engine, (See Breakdown) B &S, No. 460707-2637-E3
4	149723	Muffler Exhaust
5	144069	Exhaust Asm. Left
6	144068	Exhaust Asm. Right
8	150176	Bolt 5/16-18unc x 3/4 W/Sems
10	145552	Heat Shield Lt
11	STD551125	Washer Lock Hvy. Helical 1/4
12	STD522507	Bolt Fin Hex 1/4-20Unc x .75
13	165287	Gasket, Muffler
14	13280336	Nipple, Pipe 4-1/2
15	13200300	Elbow, Standard 90°, 3/8-18 NPT
16	STD551237	Washer Lock Ext Tooth 3/8
17	17490624	Screw Thdrol 3/8-16x1-1/2 Tytt
23	169837	Shield, Brn/Dbr Guard
25	145996	Control Choke
26	73920600	Nut Keps 3/8-24 Unf
29	137180	Arrestor, Spark
31	161911	Tank, Fuel
32	140527	Cap Fuel Guage
33	123487X	Clamp, Hose
37	137040	Line, Fuel
38	- - - - - - -	Plug, Oil Drain (See Engine Breakdown)
44	17490412	Screw Hexwsh Thdrol 1/4-20 x 3/4
45	17060612	Screw 3/8-16 x .75 SMGML Tap/R
46	19091416	Washer 9/32 x 7/8 x 16 Ga.
81	73510400	Nut Keps 1/4-20 Starter Nut

NOTE: All component dimensions given in U.S. inches
1 inch = 25.4 mm

REPAIR PARTS

MOWER LIFT

TRACTOR- -MODEL NO. 917.259150

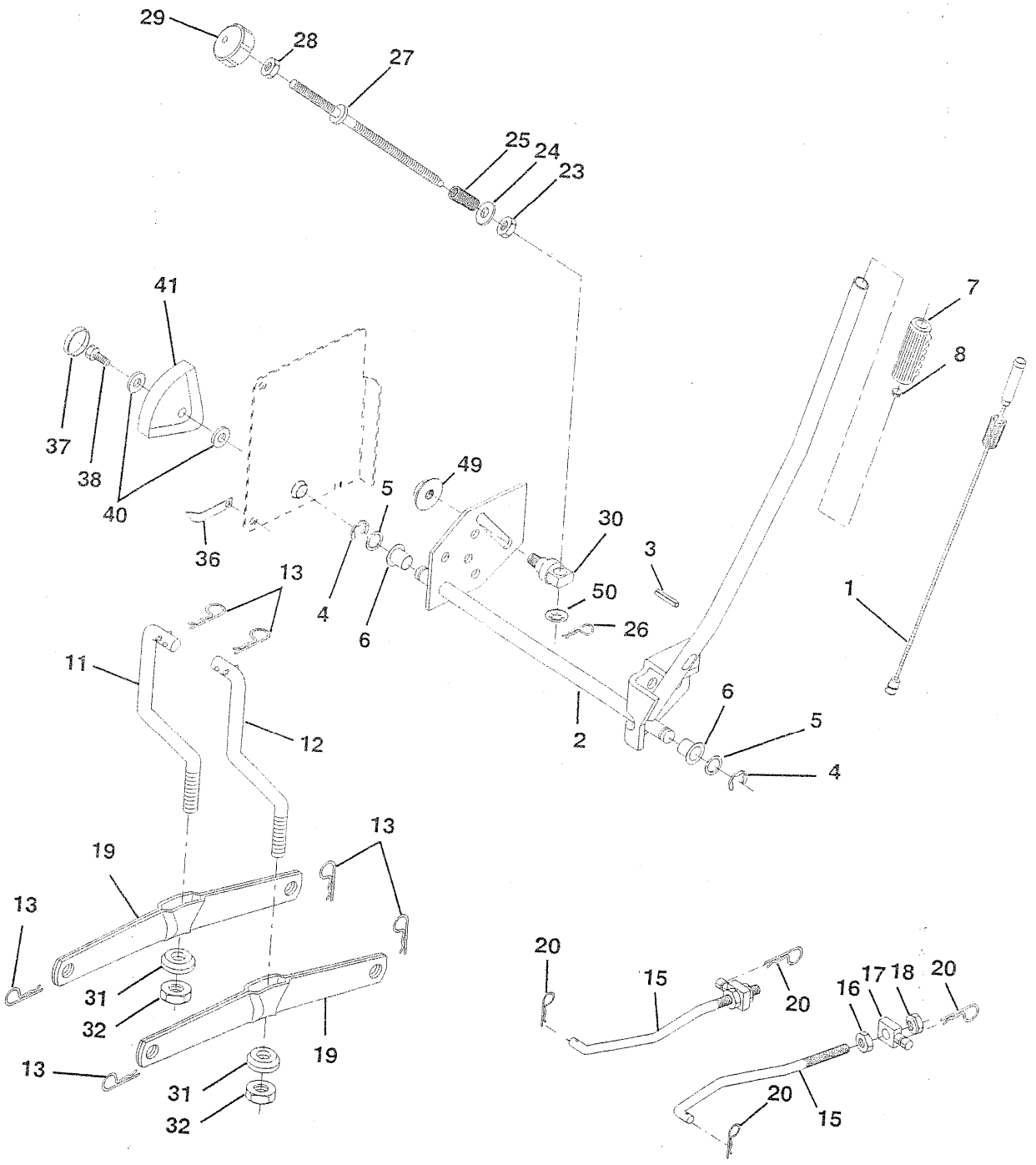

REPAIR PARTS

TRACTOR- -MODEL NO. 917.259150

MOWER LIFT

KEY NO.	PART NO.	DESCRIPTION
1	159460	Washer Asm Inner Spring W/Plunger
2	159471	Shaft Asm. Lift
3	105767X	Pin Groove
4	12000002	E Ring #5133-62
5	19211621	Washer 21/32 x 1 x 21 Ga.
6	120183X	Bearing Nylong
7	125631X	Grip Handle Fluted
8	122365X	Button Plunger Black
11	165829	Link Asm Lift L.H.
12	165831	Link Asm Lift R.H.
13	4939M	Retainer Spring
15	173288	Link Front
16	73350800	Nut Jam Hex 1/2-13 Unc
17	130171	Trunnion Blk Zinc
18	73680800	Nut Crownlock 1/2-13 Unc
19	139868	Arm Suspension Mower
20	163552	Retainer Spring
23	110807X	Nut Special
24	19131016	Washer 13/32 x 5/8 x 16 Ga.
25	2876H	Spring 2-1/8"
26	169484	Retainer Clip
27	126971X	Rod Adj Lift Zinc 7.49 Wrk Lg
28	73350600	Nut Hex Jam 3/8-16 Unc
29	138057	Knob Inf 3/8-16 Unc Blk w/sym
30	150233	Trunnion Infin Height
31	140302	Bearing, Pvt. Lift. Spherical
32	73540600	Nut Crownlock 3/8-24
36	155097	Pointer Height Indicator
37	123935X	Plug Hole Blk 1.485/1.515 Dia
38	17060516	Screw 5/16-18 x 3/4 SMGML Tap/R
40	19112410	Washer 11/32 x 1-1/2 x 10 Ga.
41	123934X	Scale Ind Height Blk
49	145212	Nut hex Flange Lock
50	110452X	Nut Push Phos & Oil

NOTE: All component dimensions given in U.S. inches
1 inch = 25.4 mm

REPAIR PARTS

MOWER

TRACTOR- -MODEL NO. 917.259150

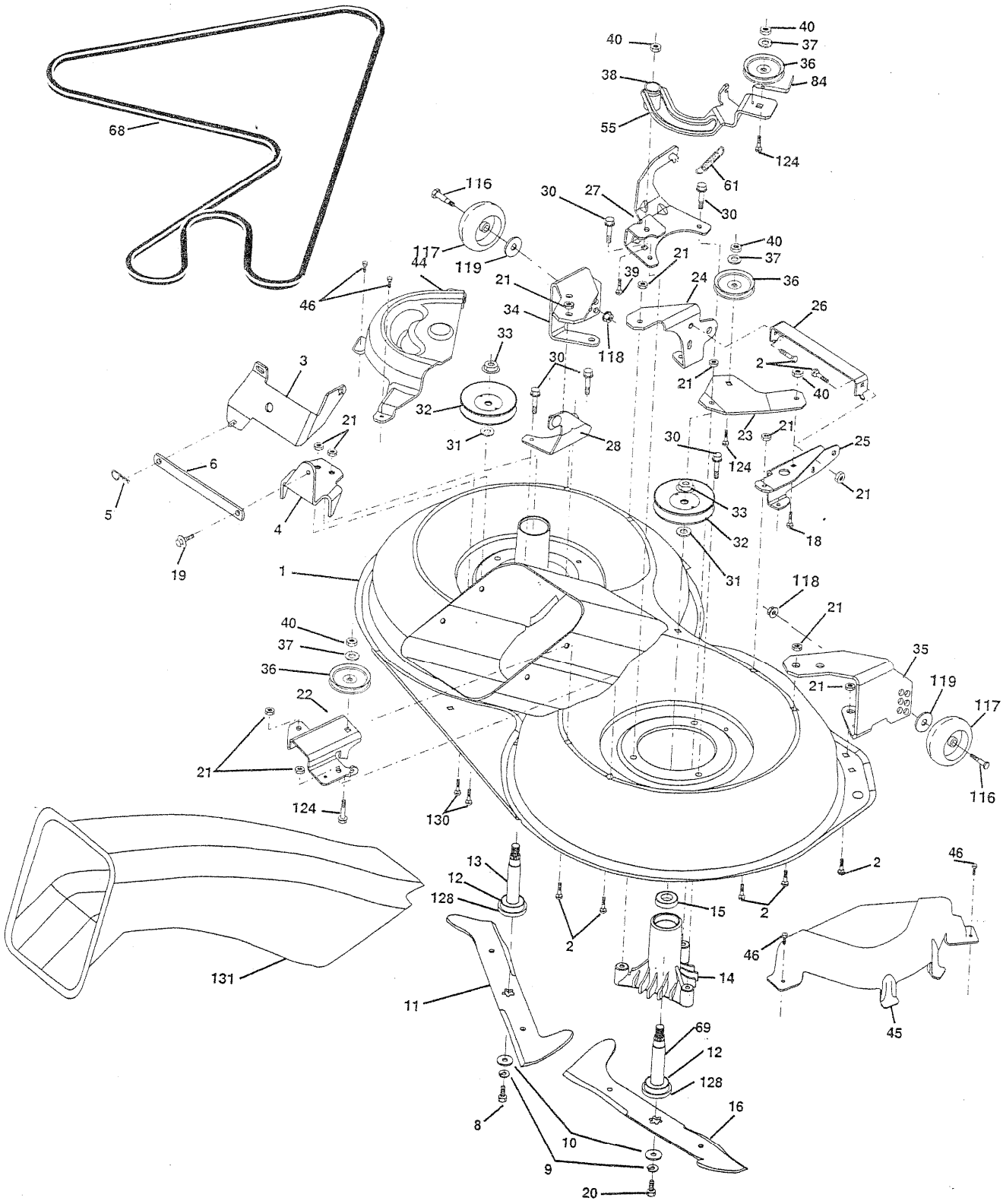

REPAIR PARTS

TRACTOR- -MODEL NO. 917.259150

MOWER

KEY NO.	PART NO.	DESCRIPTION
1	169160	Housing Asm. Mower 107 CRD
2	72140506	Bolt Rdhd Sqnk 5/16-18 Unc x 3/4
3	165569	Bracket Asm S-Bar Chass 107 CRD
4	169167	Bracket Bar Sway Deck 107 CRD
5	4939M	Retainer Spring
6	165557	Bar Sway 107 CRD
8	850857	Bolt 3/8-24 x 1.25 Gr8 Patched
9	10030600	Washer Lock Hvy 3/8 Unplated
10	140296	Washer Hard Blade Mower vented
11	168720	Blade 3-1 Lh 107 CRD
12	129895	Bearing Ball #6204 (Mandrel)
13	137645	Shaft Asm. W/Lower Bearing
14	128774	Housing Mandrel Vented (Machd)
15	110485X	Bearing Ball Mandrel
16	168721	Blade 3-1 Rh 107 CRD
18	72110608	Bolt Rdhd Sqnk 3/8-16 x 1 Gr5
19	132827	Bolt Shoulder 5/16-18 Thd Form
20	165484	Bolt 3/8-24 x 1.25 Gr8 Ptch Lhthd
21	73680500	Nut Crown Lock 5/16-18
22	169165	Bracket Idler Sprt RR 107 CRD
23	169166	Bracket Idler Sprt RF 107 CRD
24	169170	Bracket Suspension LF 107 CRD
25	169171	Bracket Suspension RF 107 CRD
26	165237	Brace Support Susp Frt CRD
27	169172	Bracket Asm. Susp RR 107 CRD
28	169168	Bracket Asm. Susp LR 107 CRD
30	157722	Screw Thd Rolling Washer Head
31	129963	Washer Spacer Mower Vented
32	153535	Mandrel Pulleys 36 & 46
33	137266	Nut Flg Top Lock Cntr B 9/16
34	169174	Bracket Gauge Wheel Lf 107 CRD
35	169175	Bracket Gauge Wheel Rf 107 CRD
36	146763	Pulley Idler V-Groove Dim 4.25
37	19131316	Washer 11/32 x 13/16 x 16 Ga
38	169851	Spacer Hub Arm Idler 107
39	72110622	Bolt Rdhd 3/8-16 x 2-3/4
40	73680600	Nut Crownlock 3/8-16 Unc
44	169180	Cover Mandrel Lh 107 CRD
45	169179	Cover Mandrel Rh 107 CRD
46	137729	Screw Thd Roll 1/4-20 x 5/8
55	169849	Arm Idler 107 CRD
61	165945	Spring Tension Belt
68	169178	Hex-Belt 107 Mower
69	165482	Shaft Asm W/Lwr Brg Rh Thd CRD
84	156085	Keeper Belt Idler
116	137644	Bolt Shoulder
117	133957	Wheel Gage Donut Wide
118	73930600	Nut Centerlock 3/8-16 Unc
119	19121414	Washer 3/8 x 7/8 x 14 Ga.
124	72110612	Bolt Carr Sh 3/8-16 x 1-1/2 Gr5
128	153390	Washer Felt
130	72110506	Bolt Rdhdsqnk 5/16-18 Unc x 3/4
131	165661	Chute Bagger CRD 92cm
–	130794	Mandrel Asm Service
–	165579	Mandrel Asm CRD Lh Threads SVC
–	170273	Deck Mower Complete

NOTE: All component dimensions given in U.S. inches
1 inch = 25.4 mm

x 165755 EGAUGE PLATE

REPAIR PARTS

BAGGER

TRACTOR- -MODEL NO. 917.259150

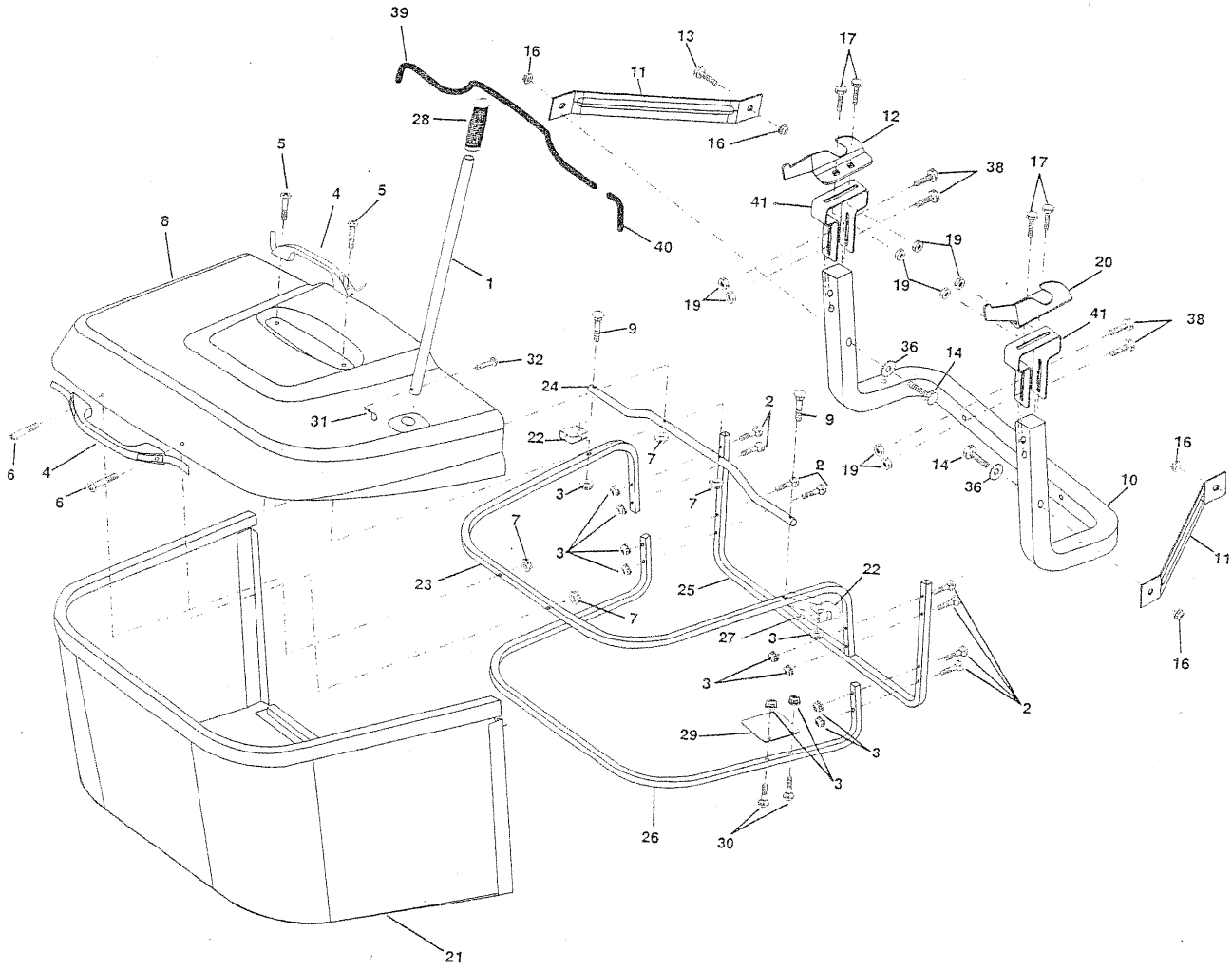

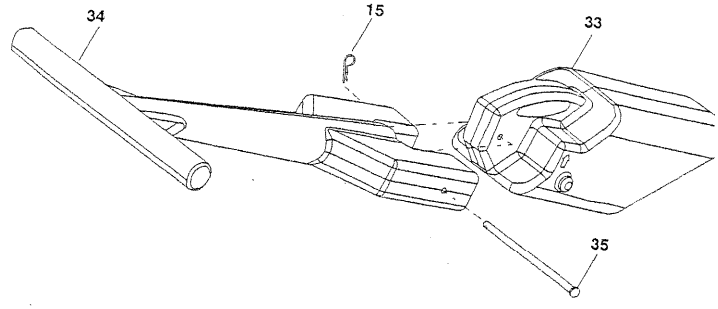

REPAIR PARTS

TRACTOR- -MODEL NO. 917.259150

BAGGER

KEY NO.	PART NO.	DESCRIPTION
1	165249	Tube Handle Bagger CRD
2	72140416	Bolt Carriage 1/4-20 x 2.0 Gr.5
3	123976X	Nut Lock 1/4 Lge Flg Gr. 5 Zinc
4	169916	Handle Bagger
5	74981024	Screw Pan Head #10-24 x 1.50 Blk
6	74981032	Screw Pan Hd
7	73401000	Nut Wiz Lock Hex Serr/Hd 10-24
8	165715X558	Cover Bagger Plastic CRD MS558
9	72140418	Bolt Carriage 1/4-20 x 2.25d x Gr.5
10	169688	Tube Support Bagger CRD
11	165719	Bracket Support Upper Bag CRD
12	169685	Bracket Horiz Adj Bagger Lh CRD
13	72110606	Bolt Rdhd Sht Sqnk 3/8-16 x 3/4
14	74520640	Bolt Hex 3/8-16 x 2-1/2 Gr.5
15	4939M	Retainer Spring
16	73900600	Nut Lock Flg 3/8-16 Unc
17	72140506	Bolt Rdhd Sht Sqnk 5/16 -18 Unc x 3/4
19	73900500	Nut Lock Hex Flange 5/16-18 Unc Pl
20	169684	Bracket Horiz Adj Bagger RH CRD
21	165780	Bag Asm CRD
22	165781	Bracket Side Bagger CRD
23	165782	Tube Upper Bagger CRD
24	165783	Tube Pivot Bagger CRD
25	165784	Tube Front Bagger CRD
26	165785	Tube Lower Bagger CRD
27	169692	Bushing Snap Bagger CRD
28	165787	Grip Handle Black
29	165839	Plate Stop Bagger handle CRD
30	72140410	Bolt Carriage 1/4-20 x 1 Gr.5
31	4497H	Retainer Spring 1" Zinc/Cad
32	126875X	Rivet Rd Hd Drilled 3/8 Dia
33	169380	Plug Mulcher
34	165570	Handle Mulcher
35	165572	Pin Mulcher
36	19132016	Washer 13/32 x 1-1/4 x 16 Ga.
38	72010520	Bolt 5/16-18 x 5.20
39	169999	Seal 26" (Long)
40	170000	Seal 7" (Short)
41	169683	Bracket Vert Adj Bagger CRD

NOTE: All component dimensions given in U.S. inches
1 inch = 25.4 mm

REPAIR PARTS

TRACTOR - - MODEL NUMBER 917.259150
HYDRO GEAR TRANSAXLE - MODEL NUMBER 331-0650

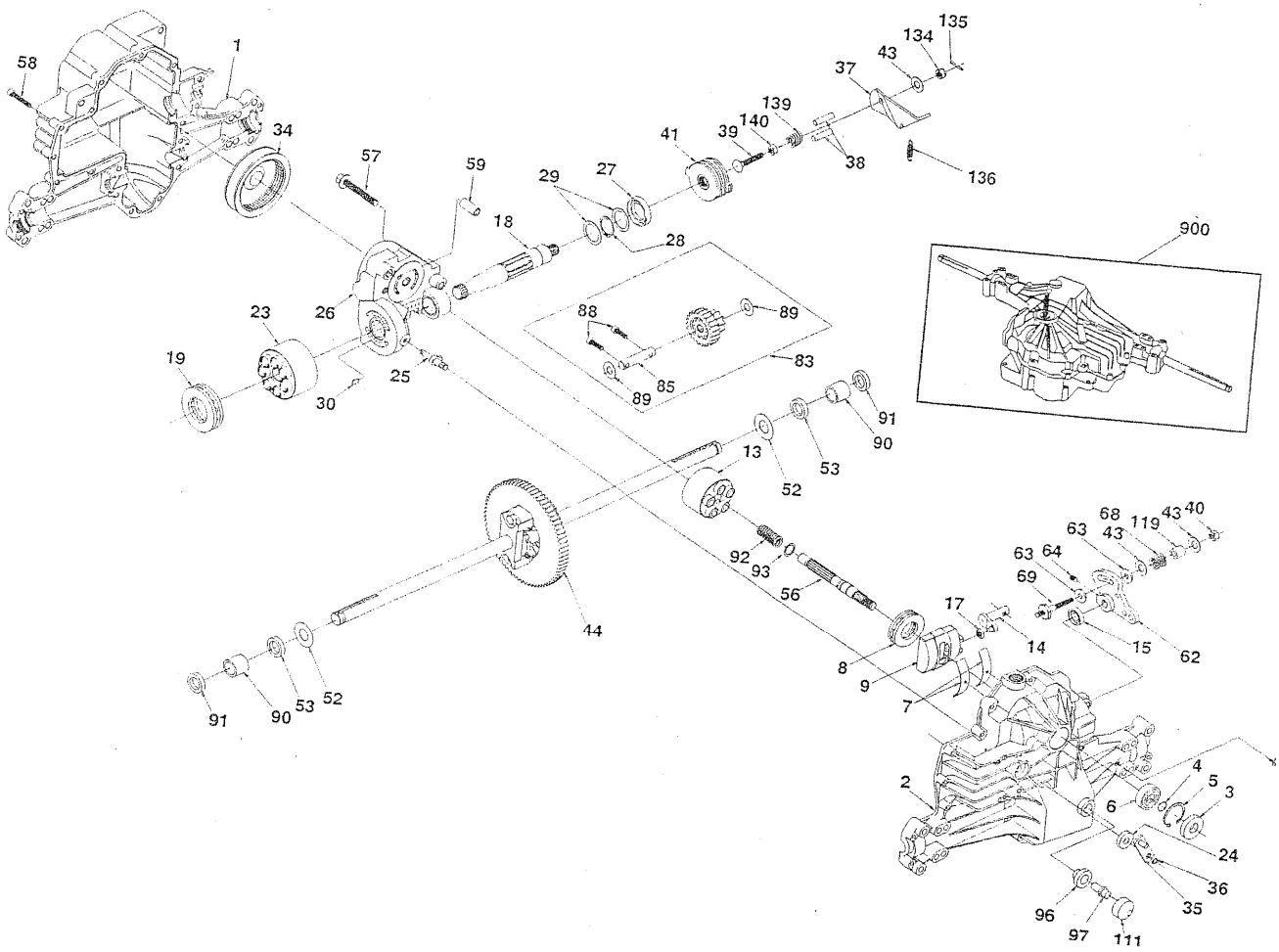

REPAIR PARTS

TRACTOR - MODEL NUMBER 917.259150
HYDRO GEAR TRANSAXLE - MODEL NUMBER 331-0650

KEY NO.	PART NO.	DESCRIPTION
1	142930	RM HOUSING, LOWER
2	169049	ASSEMBLY, UPPER HOUSING
3	142932	SEAL - LIP
4	142928	RING - WIRE RETAINING
5	142933	RING - RETAINING
6	142934	BEARING - SHAFT BALL
7	142935	BEARING - CRADLE
8	150771	BEARING - THRUST 30X52X13
9	142937	SWASHPLATE - VARIABLE
13	169050	BLOCK - CYLINDER ASS'Y
14	149939	ARM - TRUNNION
15	142940	SEAL - LIP
17	142941	GUIDE - SLOT
18	150772	SHAFT - MOTOR
19	150773	BEARING - THRUST 42X68X16
23	142944	BLOCK - CYLINDER (MOTOR)
24	142945	SEAL - LIP 10X25X7
25	142946	ACTUATOR - BYPASS
26	169051	CENTERSECTION ASS'Y
27	142948	SEAL - LIP 26X42X8
28	142949	RING - RETAINING
29	142950	WASHER - 26X35X1
30	150787	BYPASS PLATE
34	142951	OIL FILTER ELEMENT
35	142952	ARM - BYPASS
36	142953	RING - RETAINING
37	169052	ARM - BRAKE
38	142955	PIN - ACTUATING
39	150777	BOLT - 5/16-18X1-3/4
40	150778	NUT - HEX LOCK 5/16-24 UNJC
41	142958	BRAKE ROTOR/STATOR KIT

KEY NO.	PART NO.	DESCRIPTION
43	142884	WASHER - 7/16X7/8X0.060
44	150829	DIFFERENTIAL ASS'Y
52	142991	WASHER - 3/4X1.5X0.13
53	142961	SEAL - 0.75X1.25X0.250
56	142963	SHAFT - INPUT
57	150797	BOLT - 3/8-24X2.5
58	142964	BOLT - 1/4-20X1.38
59	142965	PIN - 0.5 ODX 0.43 IDX0.750
62	142966	ARM - CONTROL
63	142967	PUCK - DAMPENER
64	142920	SET SCREW
68	142969	SPRING
69	161134	5/16-24 STUD
83	169053	JACK SHAFT/PINION GEAR
85	150806	JACK SHAFT
88	142973	CAPSCREW 6MX20 LG
89	142974	WASHER 7/16X1X0.5
90	142975	SLEEVE BEARING
91	169054	SEAL - LIP 0.75X1.00X0.158
92	142977	SPRING - BLOCK
93	142978	WASHER - BLOCK THRUST
96	169055	BUSHING - VENT
97	169056	VENT
111	169057	VENT
119	142980	SPACER
134	142885	CASTLE NUT - 5/16-24
135	142886	COTTER PIN
136	169058	EXTENSION SPRING
137	161175	SCREW - 10-32X1/2
139	150775	COMPRESSION SPRING
140	150776	NUT - HEX 5/16-18

NOTE: All component dimensions given in U.S. inches
1 inch = 25.4 mm