ILLUSTRATED PARTS BREAKDOWN

BERNARD
14.5 HP LAWN TRACTOR
MODEL NO. BL1536RBH (BL1536RBHA)
954 21 00-28

171444 11.04.99 VB
Printed in the U.S.A.

TRACTOR- -MODEL NO. BL1536RBH (BL1536RBHA) PRODUCT NO. 954 21 00-28

SCHEMATIC

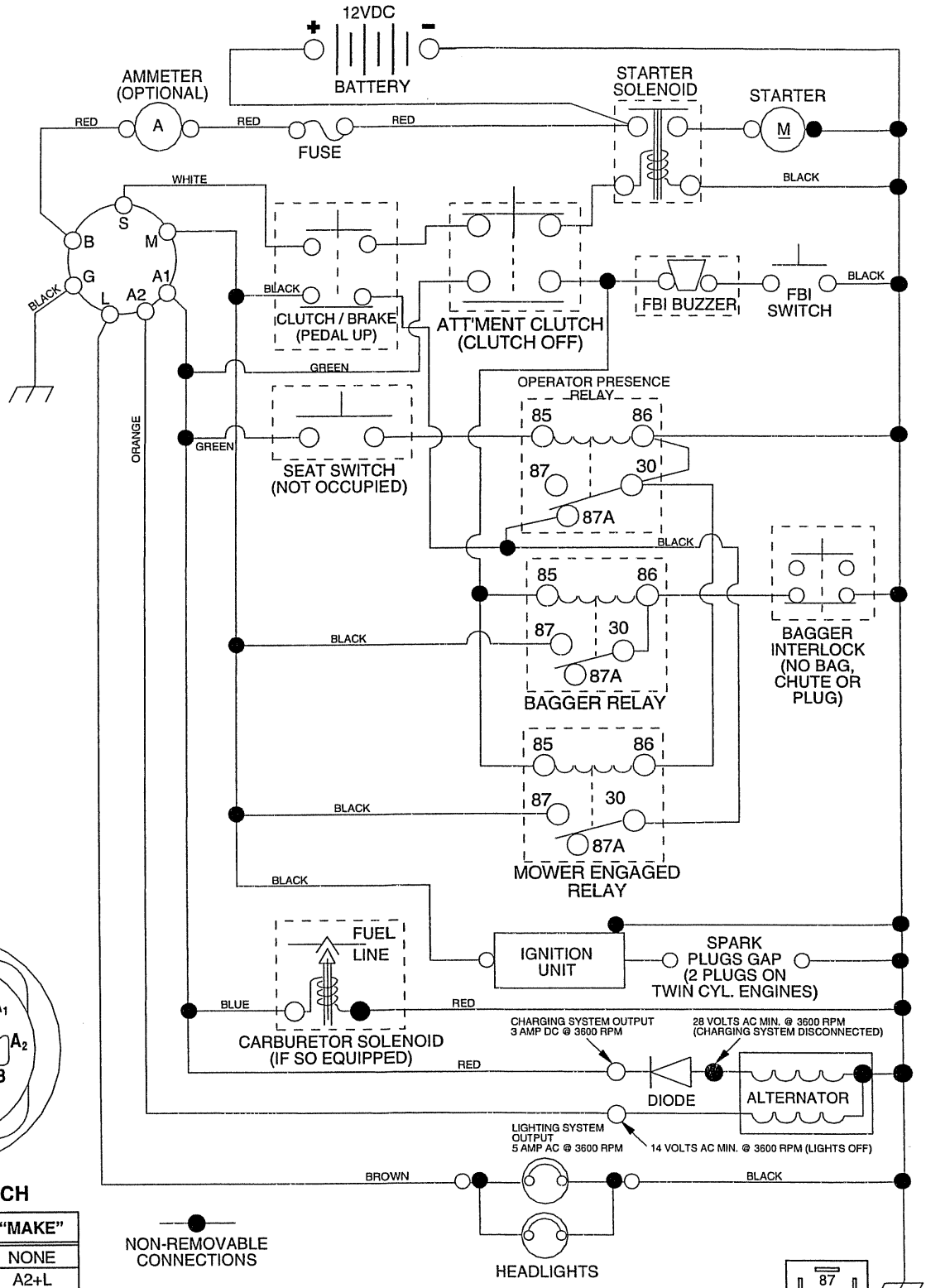

IGNITION SWITCH

POSITION	CIRCUIT	"MAKE"
OFF	M+G+A1	NONE
RUN/LIGHT	B+A1	A2+L
RUN	B+A1	NONE
START	B + S + A1	NONE

WIRING INSULATED CLIPS
NOTE: IF WIRING INSULATED CLIPS WERE REMOVED FOR SERVICING OF UNIT, THEY SHOULD BE REPLACED TO PROPERLY SECURE YOUR WIRING.

NON-REMOVABLE CONNECTIONS

REMOVABLE CONNECTIONS

PTO SWITCH

POSITION	CIRCUIT
OFF	C + G, B + H
ON	C + F, B + E, A + D

NOTE
YOUR TRACTOR IS EQUIPPED WITH A SPECIAL ALTERNATOR SYSTEM. THE LIGHTS ARE NOT CONNECTED TO THE BATTERY, BUT HAVE THEIR OWN ELECTRICAL SOURCE. BECAUSE OF THIS, THE BRIGHTNESS OF THE LIGHTS WILL CHANGE WITH ENGINE SPEED. AT IDLE THE LIGHTS WILL DIM. AS THE ENGINE IS SPEEDED UP, THE LIGHTS WILL BECOME THEIR BRIGHTEST.

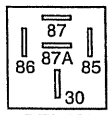

RELAY

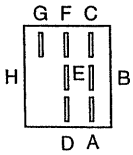

REPAIR PARTS

TRACTOR- -MODEL NO. BL1536RBH (BL1536RBHA) PRODUCT NO. 954 21 00-28

ELECTRICAL

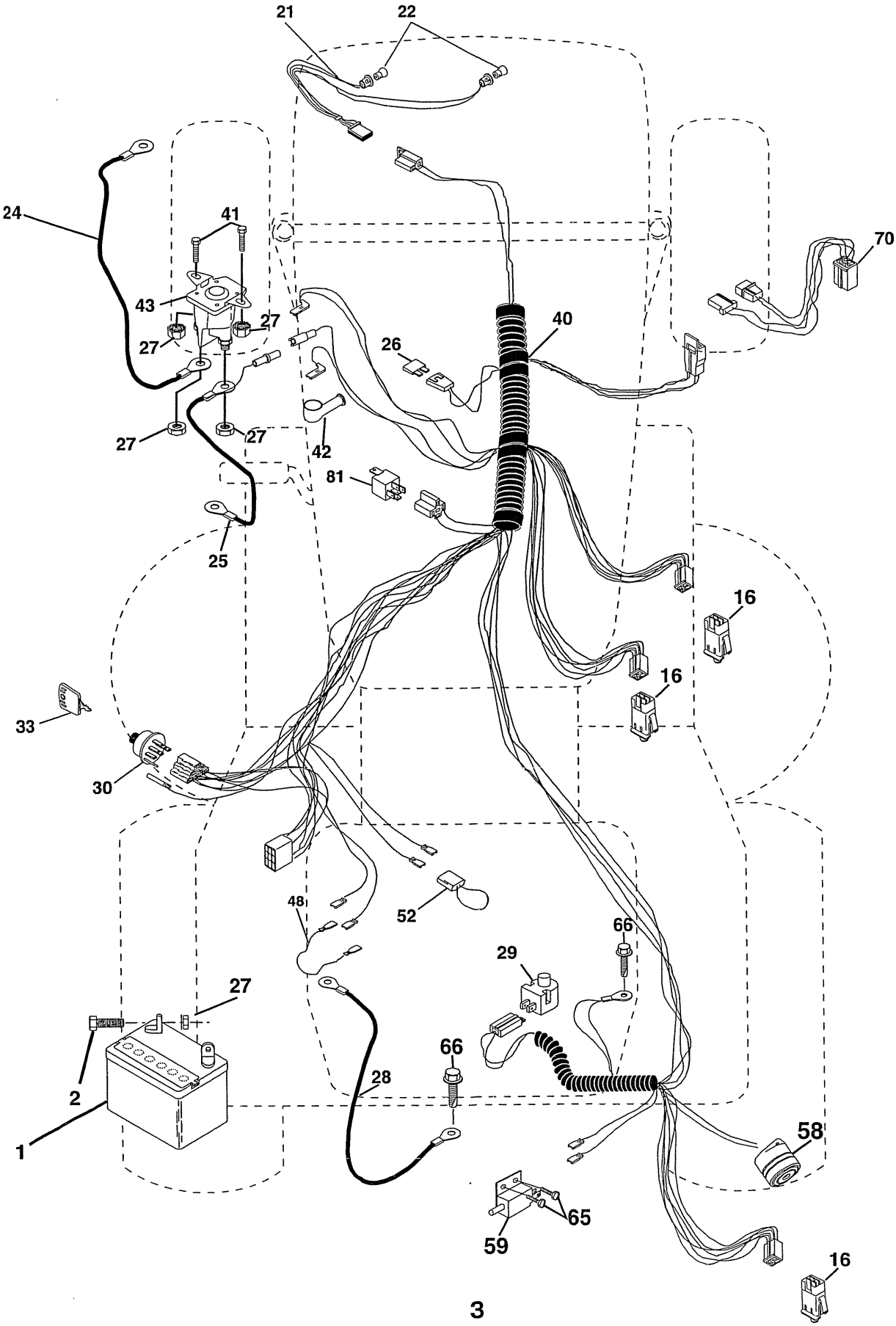

REPAIR PARTS

TRACTOR- -MODEL NO. BL1536RBH (BL1536RBHA) PRODUCT NO. 954 21 00-28

ELECTRICAL

KEY NO.	PART NO.	DESCRIPTION
1	144925	Battery 12 Volt 25 AMP Wet
2	74760412	Bolt Hex Hd 1/4-20 Unc X 3/4
16	153664	Switch Interlock Push-In
21	166181	Harness Asm Light W/4152J
22	4152J	Bulb Light #1156
24	4799J	Cable Starter 6Ga 11" Red
25	165987	Cable Battery Crd 56" Red
26	166180	Fuse 15 Amp
27	73510400	Nut Keps Hex 1/4-20 Unc
28	127725X	Cable Ground 6Ga 18" Black
29	160784	Switch Plunger Normal Op Olive
30	163968	Switch Ignition
33	140401	Key Ign Molded
40	170164	Harness Ign Crd
41	71110408	Bolt Flk Fin Hex 1/4-20 Unc X 1/2
42	131563	Cover Terminal Red
43	145673	Solenoid
48	140844	Adaptor Ammeter Rectangular
52	141940	Protection Wire Loop
58	169419	Buzzer Crd
59	166299	Switch FBI CRD
65	17211008	Screw Slftp #10-16 x 1/2 Ty-Ab
66	17490608	Screw Thdrol 3/8-16 x 1/2 Ty-Tt
70	170243	Harness Engine B&S
81	109748X	Relay Asm

NOTE: All component dimensions given in U.S. inches.
1 inch = 25.4 mm.

REPAIR PARTS

TRACTOR- -MODEL NO. BL1536RBH (BL1536RBHA) PRODUCT NO. 954 21 00-28

CHASSIS AND ENCLOSURES

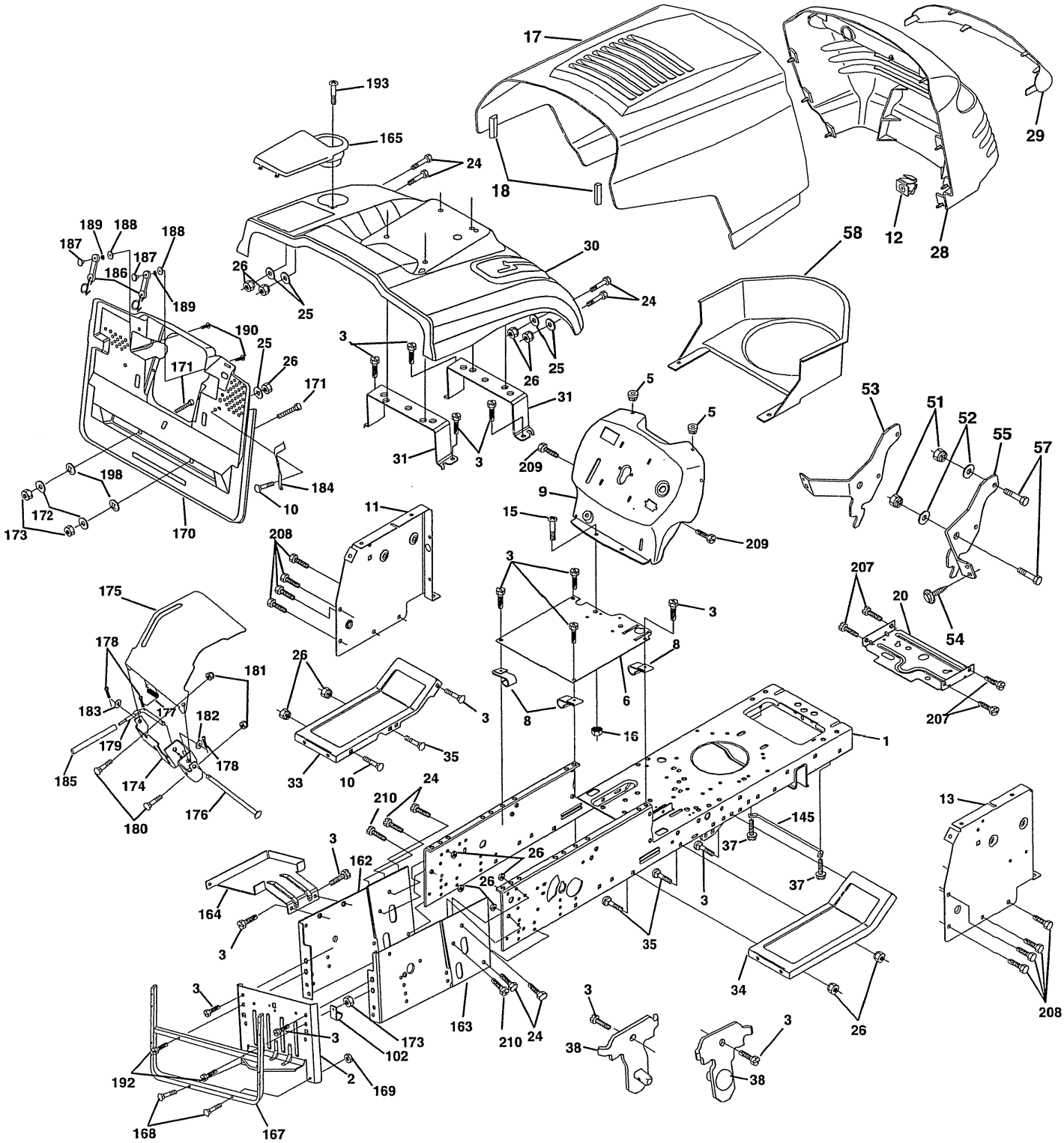

REPAIR PARTS

TRACTOR- -MODEL NO. BL1536RBH (BL1536RBHA) PRODUCT NO. 954 21 00-28

CHASSIS AND ENCLOSURES

KEY NO.	PART NO.	DESCRIPTION
1	169831	Chassis Assembly
2	165606	Drawbar
3	17060612	Screw Thdrol 3/8-16 x 1-1/2
5	155272	Bumper Hood/Dash
6	155923	Saddle
8	126471X	Clip Insulator 13/32 Mtg. Hole
9	168347X011	Dash
10	72140608	Bolt, Carriage 3/8-16 x 1
11	155927	Panel, Dash, L.H.
12	145660	Clip, Tinnerman Grille P/L
13	169117X010	Panel, Asm. Dash R.H.
15	74180512	Screw, Machine, Truss Head 5/16-18 UNC x 3/4
16	73510500	Nut
17	159639X421	Hood Assembly
18	126938X	Bumper Hood
20	156437	Plate Mtg. Battery/Fuel Tank
24	74780616	Bolt
25	19131312	Washer 13/32 x 13/16 x 12 Gauge
26	73800600	Nut
28	157428	Grille PL
29	146654X599	Lens, Grille
30	165713X421	Fender
31	165156	Bracket, Fender Support
33	145244X418	Footrest, L.H.
34	145243X418	Footrest, R.H.
35	72110606	Bolt
37	17490508	Screw Thdrol 5/16-18 x 1/2 TYT
38	169834	Bracket Asm pivot Mower Rear
51	73800400	Nut Lock w/Insert 1/4-20 UNC
52	19091416	Washer 9/32 x 7/8 x 16 Ga.
53	144697	Bracket, Grille LH
54	161464	Screw Hex WSHD 8-18 x 7/8
55	144696	Bracket, Grille RH
57	74780412	Bolt, Fin Hex 1/4-20 UNC x .75
58	150127	Duct Air Engine Pl/Lt
102	2751R	Clip Fuel Line 13/32 Mtg Hole
125	74180412	Screw Mach Cr. 1/4-20 x 3/4
140	158418	Bracket Front Suspension
145	156524	Rod Pivot Chassis/Hood
148	17490620	Screw Thdrol 3/8-16 x 1-1/4 TY-TT
162	165672	Bracket Exten Chassis Lh CRD
163	165673	Bracket Exten Chassis Rh CRD
164	165605	Support Battery CRD
165	165742X428	Cover Battery CRD Lt
167	165779	Support Asm. Backplate WLDMNT
168	72050412	Bolt, RDHD SHT NK 1/4-20 x 1-1/2
169	123976X	Nut, Lock 1/4 LGE FLG Gr. 5 Zinc
170	165607	Cover, Backplate Plastic Black
171	74520640	Bolt Hex 3/8-16 x 2-1/2 Gr.5
172	19132016	Washer 13/32 x 1-1/4 x 16 Ga.
173	73510600	Nut, Keps Hex 3/8-16 UNC
174	165939	Bracket Switch FBI CRD
175	166212	Guard Door Rear CRD
176	128600	Pin Hinge Pivot
177	132796	Spring Bagger Top LH Black
178	76020312	Pin Cotter 3/32 x 3/4 Cad Zinc
179	165942	Rod Pivot FBI CRD
180	74760516	Bolt Hex HD 5/16-18 UNC x 1
181	73680500	Nut Crownlock 5/16-18
182	138200	Washer .385 x .625 x 11 Ga.
183	19131316	Washer 13/32 x 13/16 x 16 Ga.
184	166139	Bracket Actuator Bagger CRD
185	165940	Tube Lever Switch FBI CRD
186	160793	Latch Asm Mulch/Bagger
187	2029J	Nut Weld .327/.304 #10-24
188	19061216	Washer #10
189	10071000	Washer Lock #10
190	71161010	Screw Truss Head Phil 10-24 x 5/8
192	17490624	Screw Thdrol 3/8-16 x 1-1/2
193	17070412	Screw Truss 1/4-20 x 3/4
198	168937	Nut Push
207	17670508	Screw Thdrol 5/16-18 x 1/2
208	17670608	Screw Thdrol 3/8-16 x 1/2
209	17000612	Screw Hex Wsh Thdrol 3/8-16
210	17490612	Screw, Thd. Roll. 3/8-16 x 3/4
--	5479J	Plug, Button

NOTE: All component dimensions given in U.S. inches. 1 inch = 25.4 mm.

REPAIR PARTS

TRACTOR- -MODEL NO. BL1536RBH (BL1536RBHA) PRODUCT NO. 954 21 00-28

DRIVE

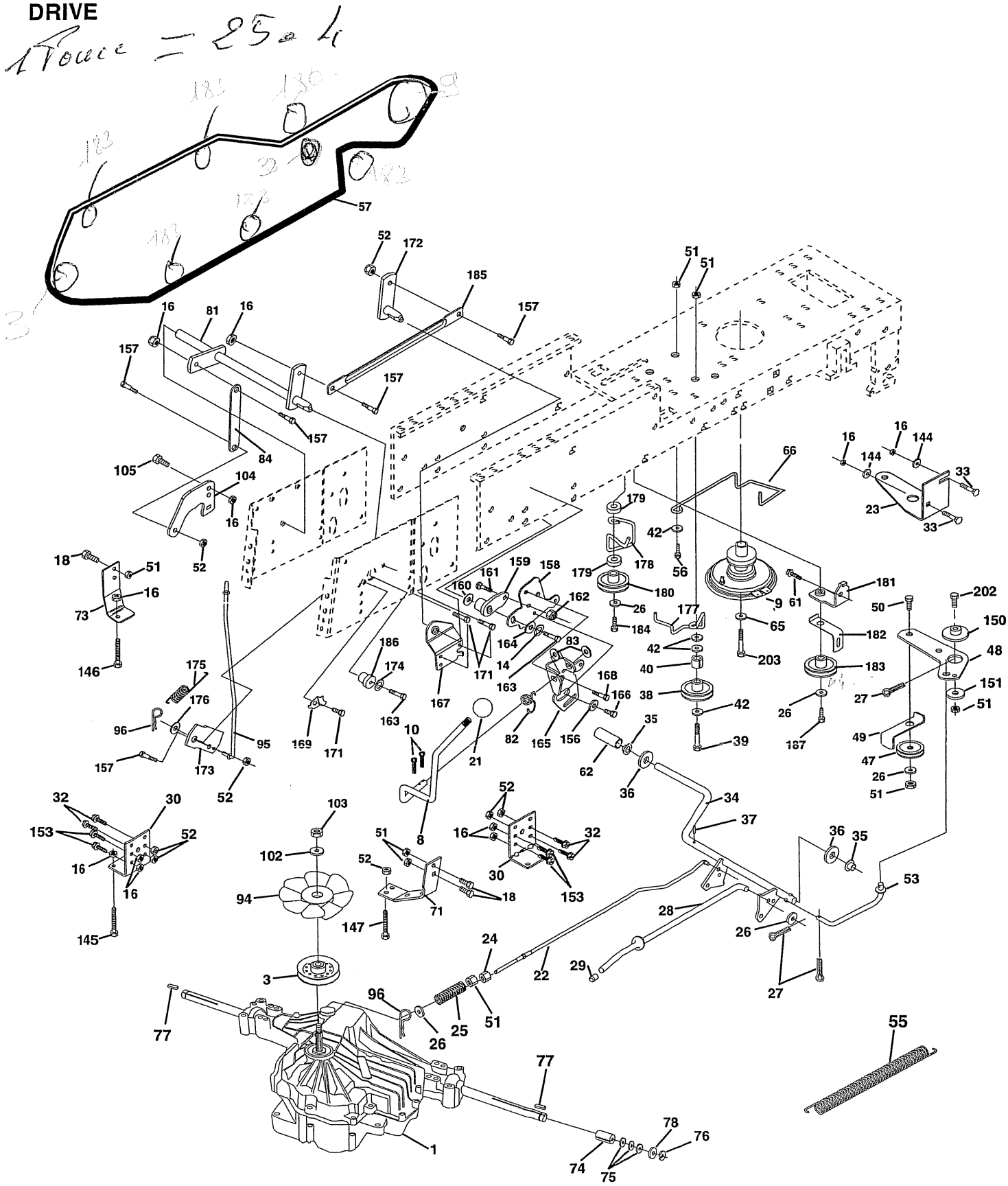

REPAIR PARTS

TRACTOR- -MODEL NO. BL1536RBH (BL1536RBHA) PRODUCT NO. 954 21 00-28

DRIVE

KEY NO.	PART NO.	DESCRIPTION
1	- - - - - - -	Transaxle Hydro Gear 331-0650 (Order parts from transaxle manufacturer)
3	143995	Pulley Hydro 0650 Lt/CRD
8	165619	Rod, Shift Fender Adjust Lt
9	170163	Clutch Asm Noram
10	76020416	Pin, Cotter 1/8 x 1
14	10040400	Washer, Lock Hvy Helical
16	73800500	Nut, Lock Hex w/Ins 5/16-18 UNC
18	74780616	Bolt Hex 3/8-16 UNC x 1 Gr.5
21	106933X	Knob Round 1/2-13 UNC
22	165688	Rod, Brake CRD 0650
23	170017	Bracket Clutch Noram
24	73350600	Nut
25	106888X	Spring, Rod, Brake
26	19131316	Washer 13/32 x 13/16 x 16 Ga.
27	76020412	Pin, Cotter 1/8 x 3/4
28	145204	Rod, Parking Brake
29	71673	Cap, Parking Brake
30	130807	Bracket, Mfg. Transaxle
32	74760512	Bolt Hex 5/16-18 UNC x 3/4
33	72140506	Bolt Rdhd Sqnk 5/16-18 Unc x 3/4
34	165496	Shaft, Asm Pedal Foot CRD
35	120183X	Bearing, Nylon
36	19211616	Washer 21/32 x 1 x 16 Ga.
37	1572H	Pin, Roll 3/16 x 1"
38	165936	Pulley Flat Composite 3.06"
39	72110622	Bolt Rdhd 3/8-16 x 2-3/4 Gr.5
40	4470J	Spacer, Split 395 x 59 Bzp
42	19131312	Washer 13/32 x 13/16 x 12 Ga.
47	127783	Pulley, Idler, V Groove Plasitc
48	154407	Bellcrank Clutch Grnd Drv
49	123205X	Retainer, Belt Style Spring
50	74760624	Bolt Hex Hd 3/8-16 UNC x 1-1/2
51	73680600	Nut, Crownlock 3/8-16 UNC
52	73680500	Nut Crownlock 5/16-18
53	105710X	Link, Clutch 7.66
55	105709X	Spring, Return, Clutch
56	74760620	Bolt, Hex 3/8-16 UNC x 1-1/4
57	165632 -	V-Belt Kev 112" 0650 CRD
61	17060612	Screw 3/8-16 x 3/4
62	8883R	Cover, Pedal
65	10040700	Washer
66	154778	Keeper, Belt Engine F-Proof
71	140158	Strap, Torque, Lh
73	156347	Strap, Torque, Rh
74	121199X	Spacer, Split
75	121749X	Washer 25/32 x 1-1/4 x 16 Ga.
76	12000001	Ring, E
77	123583X	Key, Square
78	121748X	Washer 25/32 x 1-5/8 x 16 Ga.
81	165585	Asm, Shaft
82	123782X	Spring, Torsion
83	19171216	Washer 17/32 x 3/4 x 16 Ga.
84	165629	Link, Transaxle
94	140462	Fan 7"
95	165935	Control Asm Bypass Hydro
96	4497H	Spring, Retainer 1"
102	141322	Washer, Bellville .50ID x 1.50D
103	73940800	Nut, Hex Jam Toplock 1/2-20 UNF
104	140156	Arm, Control Hydro
105	71070516	Screw Cap Hex 5/16 x 18 Unc-1
144	19111016	Washer 11/32 x 5/8 x 16 Ga
145	74490540	Bolt Hex FGHD 5/16-18 x Gr 5
146	74490536	Bolt Hex FLGHD 5/16-18 x 2-1/4
147	74490524	Bolt Hex FLGHD 5/16-18 x 1-1/2
150	165850	Bushing, Bellcrank Grnd Dr
151	19133210	Washer 13/32 x 2 x 10 Ga.
153	74760516	Bolt Hex Hd 5/16-18 Unc x 1
156	166002	Washer Srrted 5/16ID x 1.125
157	153236	Bolt Shoulder 5/16-18 Unc 2A
158	165589	Bracket Shift Mount
159	165494	Hub Tapered Flange Shift Lt
160	19292016	Washer 29/32 x 1-1/4 x 16 Ga.
161	72140406	Bolt Rdhd Sqnk 1/4-20 x 3/4 Gr 5
162	73680400	Nut Crownlock 1/4-20 Unc
163	74780416	Bolt Hex Fin 1/4-20 Unc x 1 Gr 5
164	19091010	Washer 5/8 x .281 x 10 Ga.
165	165623	Bracket Pivot Lever
166	166880	Screw 5/16-18 x 5/8
167	165588	Bracket Support Shift CRD
168	165492	Bolt Shoulder 5/16-18 x .561
169	165580	Plate Fastening Lt
172	165587	Shaft Asm Shifter Frt CRD 0650
173	165934	Bracket Hydro Bypass CRD
174	10090400	Washer Lock 1/4
175	165931	Spring Bypass CRD
176	19070816	Washer 7/32 x 1/2 x 16 Ga.
177	165932	Keeper Flat Idler 3.06" CRD
178	165933	Keeper Belt Idler 1.88" CRD
179	120958X	Washer Sintered
180	165630	Pulley, Idler, Flat 1.88"CRD
181	165797	Bracket Idler Ground Drive CRD
182	165634	Keeper Belt 2.5" Od V-Idler CRD
183	165626	Pulley V-Idler 2.50" Od CRD
184	17490644	Screw Hexwsh Thdrol 3/8-16 x 2-3/4
185	165541	Link Shift CRD Hydro 0650
186	165614	Hub Tapered Round CRD
187	17490620	Screw Thdrol 3/8-16 x 1-1/4 TT
190	17490608	Screw Thdrol 3/8-16 x 1/2 Ty-Tt
194	73680600	Nut Crownlock 3/8-16 UNC
202	72110612	Bolt Carr 3/8-16 x 1-1/2 Gr5
203	71170780	Bolt Hex 7/16-20 x 5

NOTE: All component dimensions given in U.S. inches
1 inch = 25.4 mm

REPAIR PARTS

TRACTOR- -MODEL NO. BL1536RBH (BL1536RBHA) PRODUCT NO. 954 21 00-28

STEERING

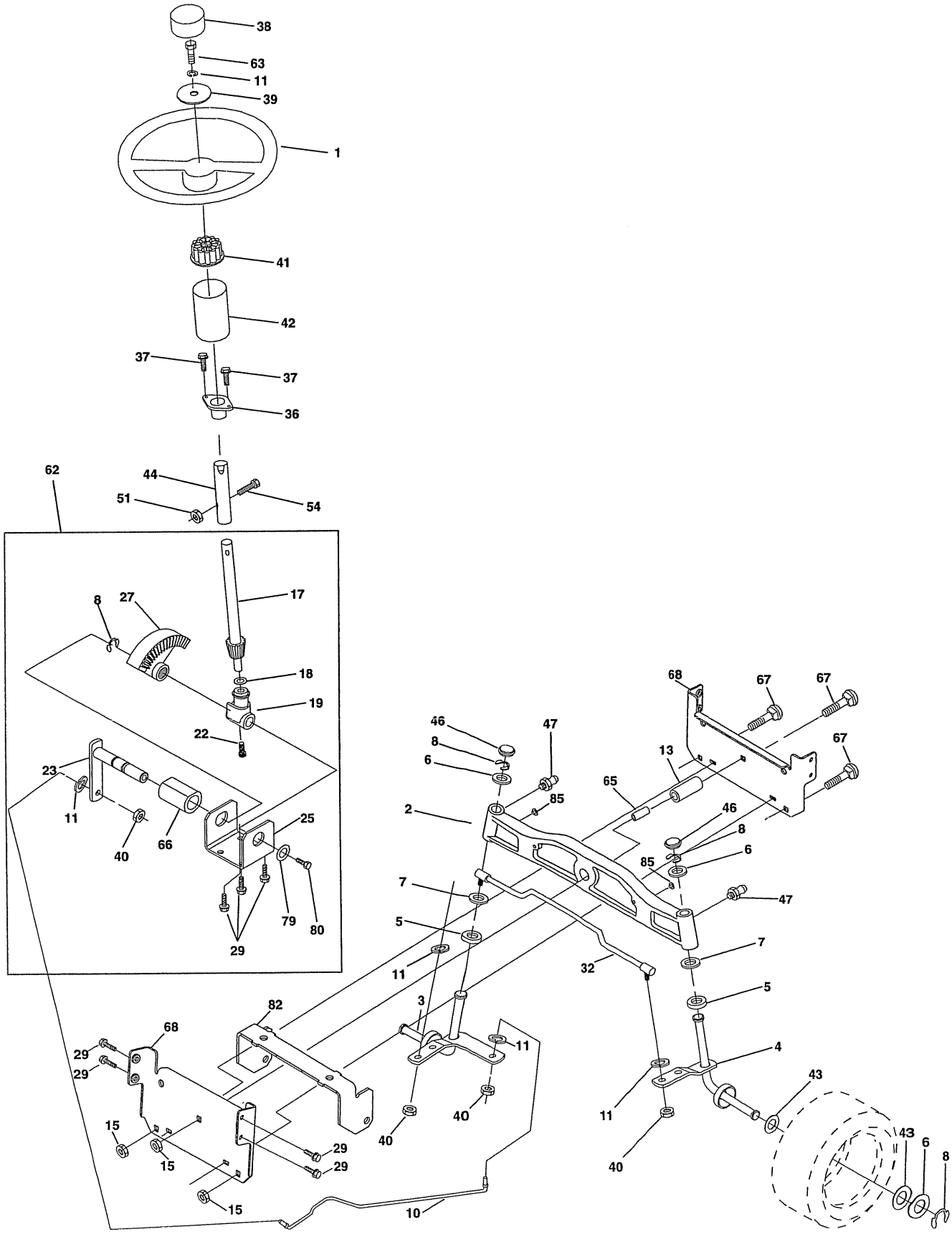

REPAIR PARTS

TRACTOR- -MODEL NO. BL1536RBH (BL1536RBHA) PRODUCT NO. 954 21 00-28

STEERING

KEY NO.	PART NO.	DESCRIPTION
1	139768	Steering Wheel
2	165854	Axle Cast
3	169840	Spindle Assembly, L.H.
4	169839	Spindle Assembly, R.H.
5	6266H	Bearing, Race, Thrust, Hardened
6	121748X	Washer 25/32 x 1-5/8 x 16 Gauge
7	19272016	Washer 27/32 x 1-1/4 x 16 Gauge
8	12000029	Ring, Klip
10	169832	Link, Drag
11	10040600	Washer, Lock
13	136518	Spacer Brg. Front Axle
15	145212	Nut, Hex Flange Lock
17	156546	Shaft Assembly, Steering
18	57079	Washer, Thrust .515 x .750 x .033
19	160395	Support, Shaft
22	165857	Screw Hex Wshhd Torx
23	165851	Pittman Shaft Assembly
25	154406	Bracket, Steering
27	136874	Gear, Sector
29	17060612	Screw, 3/8-16 x 3/4
32	170162	Rod, Tie
36	155099	Bushing, Steering
37	152927	Screw TT #I0-32 x 5 x 3/8 Flange
38	140175	Cap Wheel Steering
39	19133812	Washer 13/32 x 2-3/8 x 12 Gauge
40	7810H	Nut Lock Center 3/8-24 Unf
41	100711L	Adaptor, Steering Wheel
42	145054X428	Boot, Steering Dash P/L Mtl
43	121749X	Washer 25/32 x 1-1/4 x 16 Gauge
44	153720	Extension Steering Non-Adjust
46	121232X	Cap, Spindle
47	6855M	Fitting, Grease
51	73800500	Nut Lock Hx W/Ins 5/16-18 UNC
54	74780520	Bolt Fin Hex 5/16-18 UNC x 1-1/4
62	167902	Kit, Steering Assembly, Service
63	74780616	Bolt Fin Hex 3/8-16 unc. x 1 Gr. 5
65	160367	Spacer Brace Axle
66	154404	Bearing Arm Pittman
67	72110618	Bolt Rdhd Sqnk 3/8-16 x 2-1/4
68	169827	Brace Axle
79	19132012	Washer 13/32 x 1-1/4 x 12 Ga
80	74950612	Bolt Hex Nylon 3/8-16 x 3/4
82	169835	Bracket Susp Chassis Front
85	133835	Fastener Christmas Tree

NOTE: All component dimensions given in U.S. inches.
1 inch = 25.4 mm.

REPAIR PARTS

TRACTOR- -MODEL NO. BL1536RBH (BL1536RBHA) PRODUCT NO. 954 21 00-28

SEAT

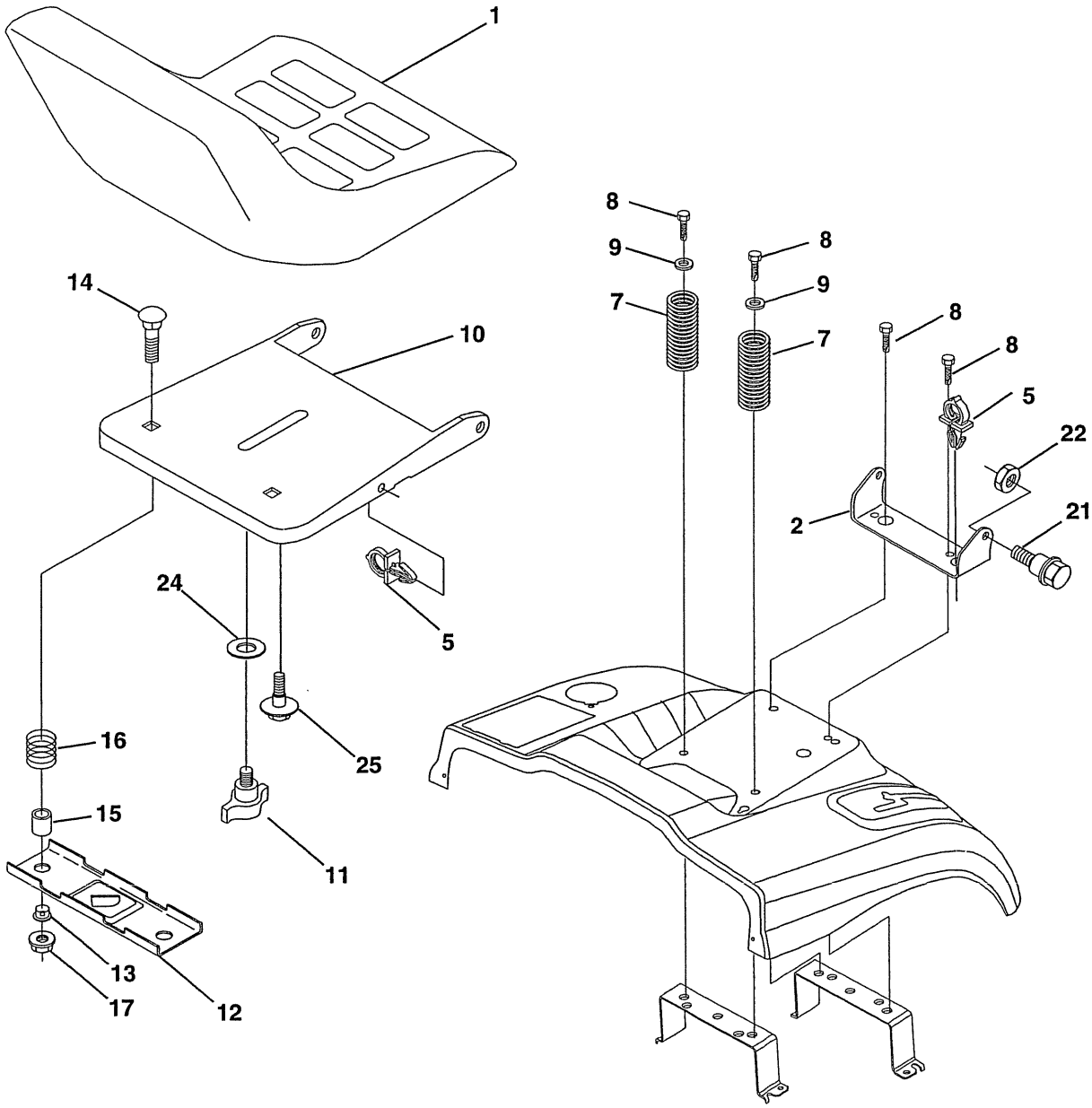

KEY NO.	PART NO.	DESCRIPTION
1	140117	Seat
2	140551	Bracket Pnt Pivot Seat (blk)
5	145006	Clip Push In Hinged
7	124181X	Spring Seat Cprsn 2 250 Blk Zi
8	17000616	Screw 3/8-16 X 1-1/2
9	19131614	Washer 13/32 X 1 X 14 Ga
10	155925	Pan Pnt Seat (blk)
11	166369	Knob Seat Adj Wingnut
12	121246X	Bracket Pnt Mounting Switch
13	121248X	Bushing Snap Blk Nyl 50 Id

KEY NO.	PART NO.	DESCRIPTION
14	72050412	Bolt Rdhd Sht Nk 1/4-20x1-1/2
15	134300	Spacer Split .28 X .96 Zinc
16	121250X	Spring Cprsn
17	123976X	Nut Lock 1/4 Lge Flg Gr 5 Zinc
21	171852	Bolt Shoulder 5/16-18 Unc-2A
22	73800500	Nut Hex Lock w/Ins 5/16-18
24	19171912	Washer 17/32 X 1-3/16 X 12 Ga.
25	127018X	Bolt Shoulder 5/16-18 X 62

NOTE: All component dimensions given in U.S. inches.
1 inch = 25.4 mm

REPAIR PARTS

TRACTOR- -MODEL NO. BL1536RBH (BL1536RBHA) PRODUCT NO. 954 21 00-28

DECAL

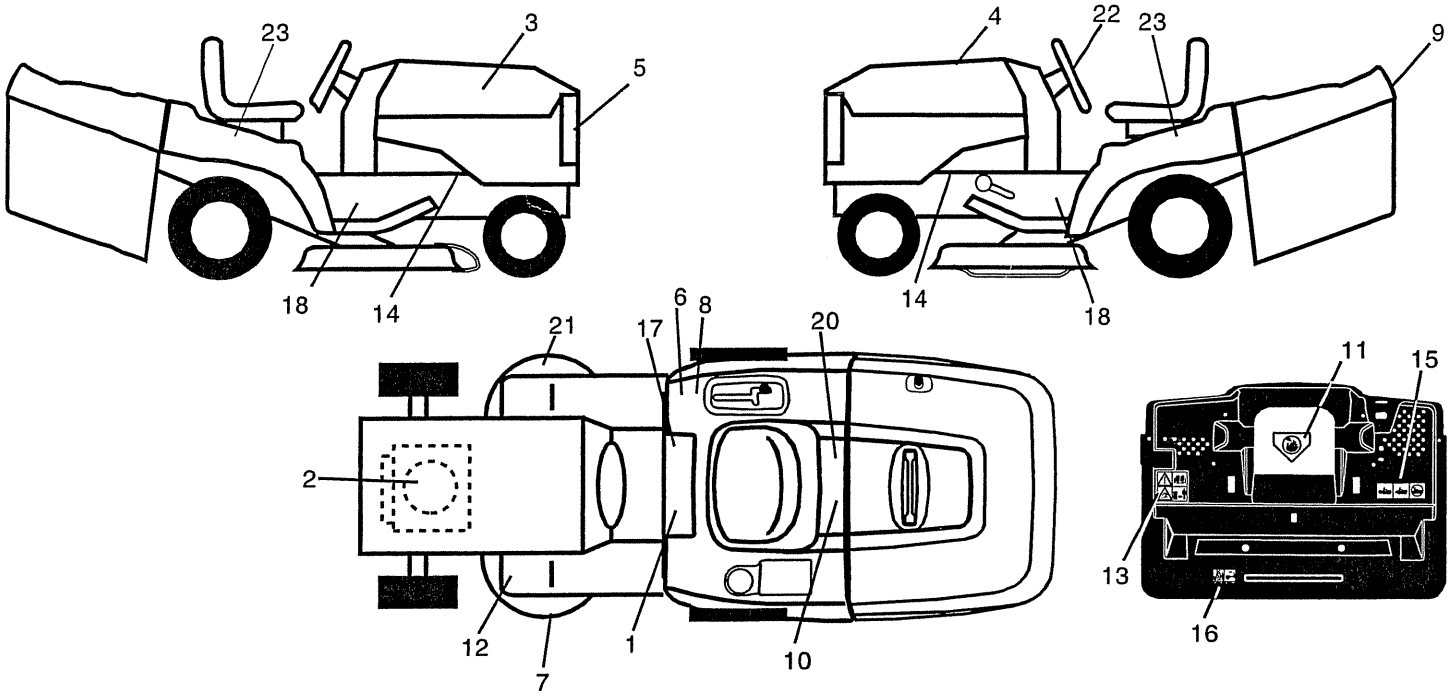

KEY NO.	PART NO.	DESCRIPTION
1	145498	Decal Read Owner's Manual Sym
2	170846	Decal Hp Engine
3	170522	Decal Hood Rh
4	170523	Decal Hood Lh
5	166287	Decal Logo Lens
6	126187X	Decal 100 DBA
7	135013	Decal Enviro Deck
8	145437	Decal Europe Stand Ce
9	166708	Decal Fender Logo
10	145005	Decal Bat Dan/Poi P/L Sym Wpn
11	145494	Decal Mower Cut Finger Symbol
12	159737	Decal Brake/Clutch Symbol Lt
13	166959	Decal Warn Back Plate CRD
14	159736	Decal Chassis Hot Muffler
15	166961	Decal Oper Bag Presence CRD
16	162598	Decal Drawbar Load Limit
17	140837	Decal Saddle Brake Parking
18	167105	Decal Chassis Hydro 36" Bernard
20	166960	Decal Bypass Fender CRD
21	166286	Decal Deck Sch 92 CRD
22	166285	Decal, Strg Whl
23	151106	Decal Fender Auto
—	138311	Decal Lift Handle
—	157199X428	Pad Footrest
—	171443	Manual Operators (Euro)

WHEELS & TIRES

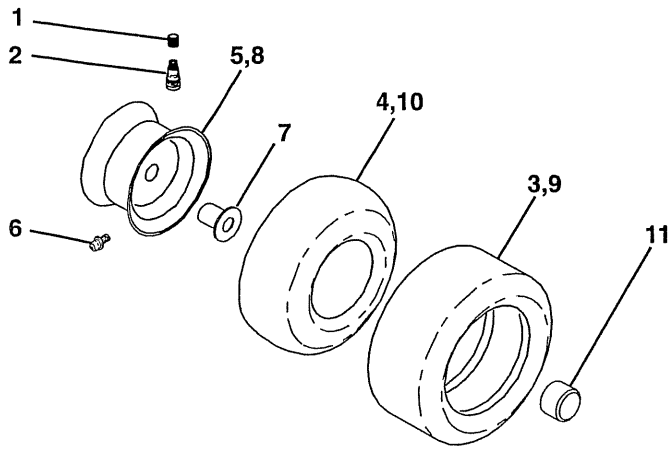

KEY NO.	PART NO.	DESCRIPTION
1	59192	Cap Value Tire
2	65139	Stem Value
3	106222X	Tire F Ts 15 X 6 0 - 6 Service
4	59904	Tube Inner Front #35060
5	106732X421	Rim Asm 6"front Service
6	278H	Fitting Grease
7	9040H	Bearing Flange
8	106108X421	Rim Asm 8"rear Service
9	138468	Tire R Ts 20 x 8-8 Service
10	7152J	Tube Rear 9 5 X 8 Service
11	104757X	Cap Axle Blk 1 50 X 1 00
- -	144334	Sealant, Tire (10 oz. tube)

NOTE: All component dimensions given in U.S. inches
1 inch = 25.4 mm

REPAIR PARTS

TRACTOR- -MODEL NO. BL1536RBH (BL1536RBHA) PRODUCT NO. 954 21 00-28

ENGINE

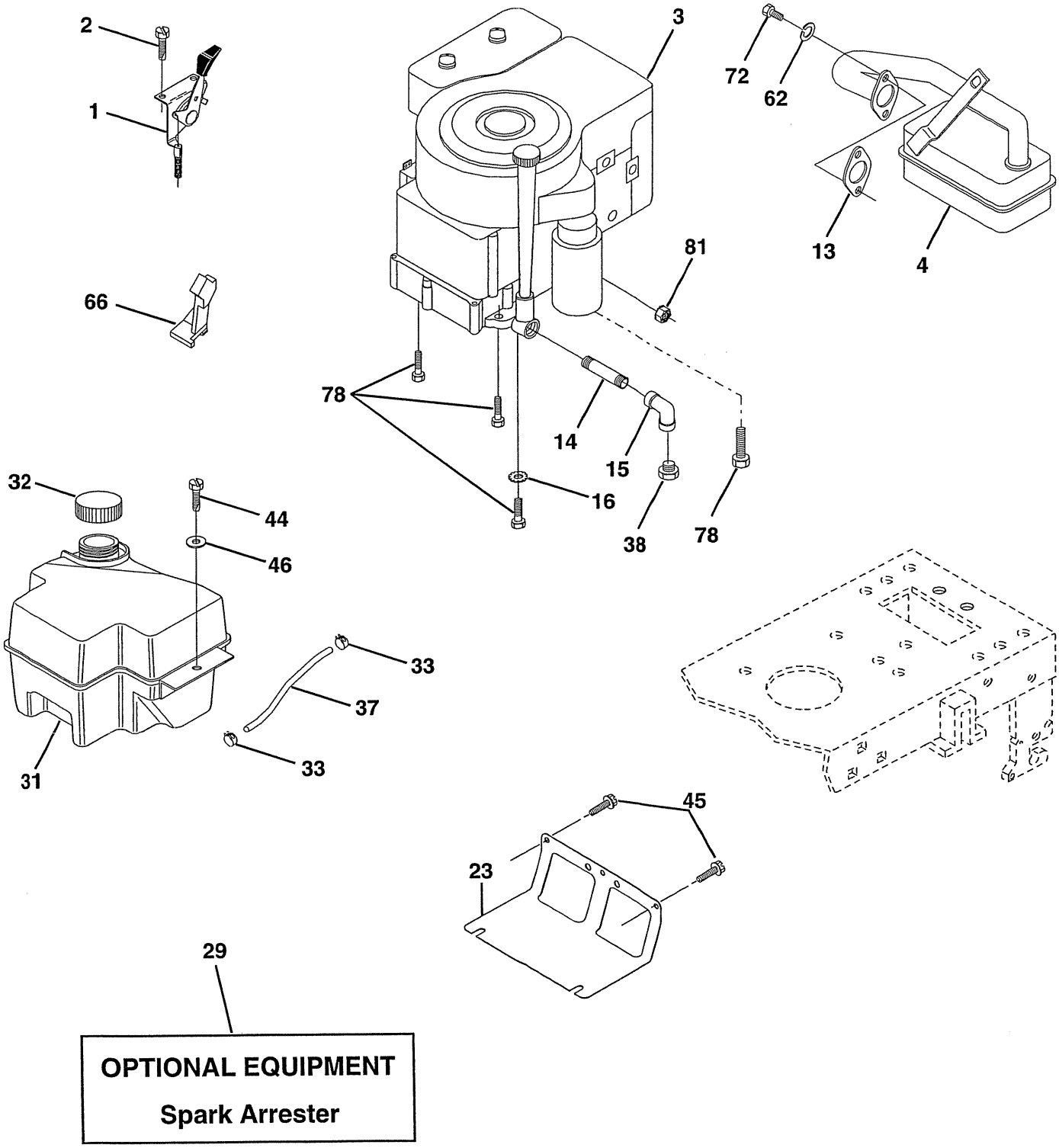

REPAIR PARTS

TRACTOR- -MODEL NO. BL1536RBH (BL1536RBHA) PRODUCT NO. 954 21 00-28

ENGINE

KEY NO.	PART NO.	DESCRIPTION
1	140310	Control Throt /Ch Lh
2	17720410	Screw Hex Thd Cut 1/4-20x5/8 T
3	- - - - - - - -	Engine Briggs Model 287707 (Order Parts from Engine Manufacturer)
4	137352	Muffler Exhaust B&S Lt
13	165291	Gasket 1 313 Id Tin Plated
14	13280324	Nipple Pipe 3/8 Npt X 3"
15	13200300	Elbow Std 90 Degree 3/8-18 Npt
16	11050600	Washer Lock Ext Tooth 3/8
23	169837	Shield Browning/Debris Guard
29	137180	Arrestor Spark
31	161911	Tank Fuel 2.00 Fr
32	140527	Cap Asm Fule Top Vent N/Lany
33	123487X	Clamp Hose Blk
37	137040	Line Fuel 20"
38	- - - - - -	Plug Oil Drain (Order From Engine Manufacturer)
44	17490412	Screw Hexwsh Thdrol 1/4-20x3/4
45	17060612	Screw 3/8-16 x 3/4
46	19091416	Washer 9/32 X 7/8 X 16ga
62	10040500	Washer Lock Hvy Hlcl Spr 5/16
66	127951	Stop Throttle 3000 Rpm
72	71070512	Screw Hexhd Cap 5/16-18x3/4
78	17060620	Screw 3/8-16x1-1/4
81	128861	Nut Flange 1/4-20 Starter Nut

NOTE: All component dimensions given in U.S. inches
1 inch = 25.4 mm

REPAIR PARTS

TRACTOR- -MODEL NO. BL1536RBH (BL1536RBHA) PRODUCT NO. 954 21 00-28

MOWER LIFT

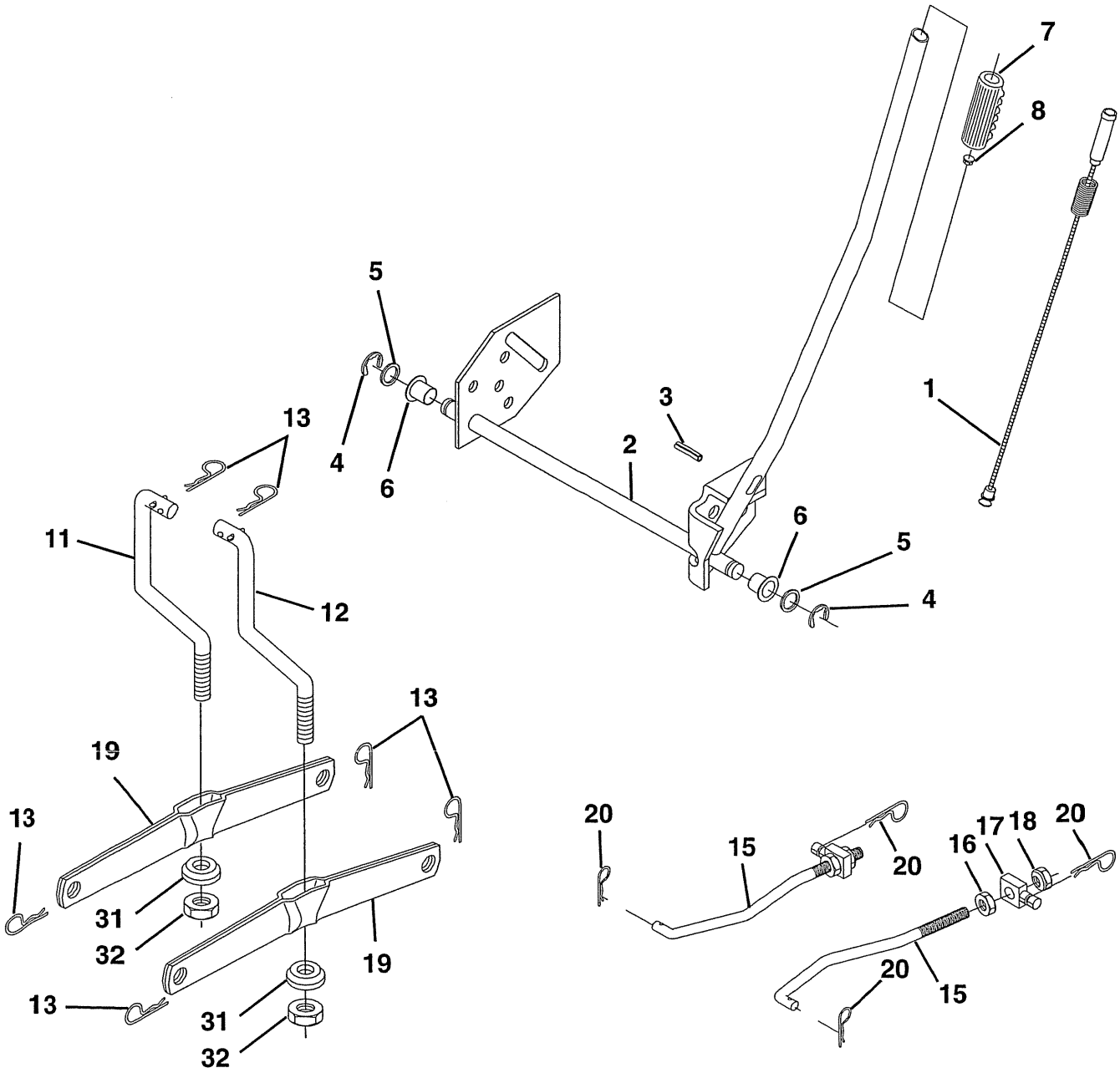

REPAIR PARTS

TRACTOR- -MODEL NO. BL1536RBH (BL1536RBHA) PRODUCT NO. 954 21 00-28

MOWER LIFT

KEY NO.	PART NO.	DESCRIPTION
1	159460	Washer Asm Inner Spring W/Plunger
2	159471	Shaft Asm. Lift
3	105767X	Pin Groove
4	12000002	E Ring #5133-62
5	19211621	Washer 21/32 x 1 x 21 Ga.
6	120183X	Bearing Nylong
7	109413X	Grip Handle
8	124526X	Button Plunger Black
11	165829	Link Asm Lift L.H.
12	165831	Link Asm Lift R.H.
13	4939M	Retainer Spring
15	167253	Link Front
16	73350800	Nut Jam Hex 1/2-13 Unc
17	130171	Trunnion Blk Zinc
18	73800800	Nut Lock w/wash 1/2-13 Unc
19	139868	Arm Suspension Mower
20	163552	Retainer Spring
31	140302	Bearing, Pvt. Lift. Spherical
32	73540600	Nut Crownlock 3/8-24

NOTE: All component dimensions given in U.S. inches
1 inch = 25.4 mm

REPAIR PARTS

TRACTOR- -MODEL NO. BL1536RBH (BL1536RBHA) PRODUCT NO. 954 21 00-28

MOWER DECK

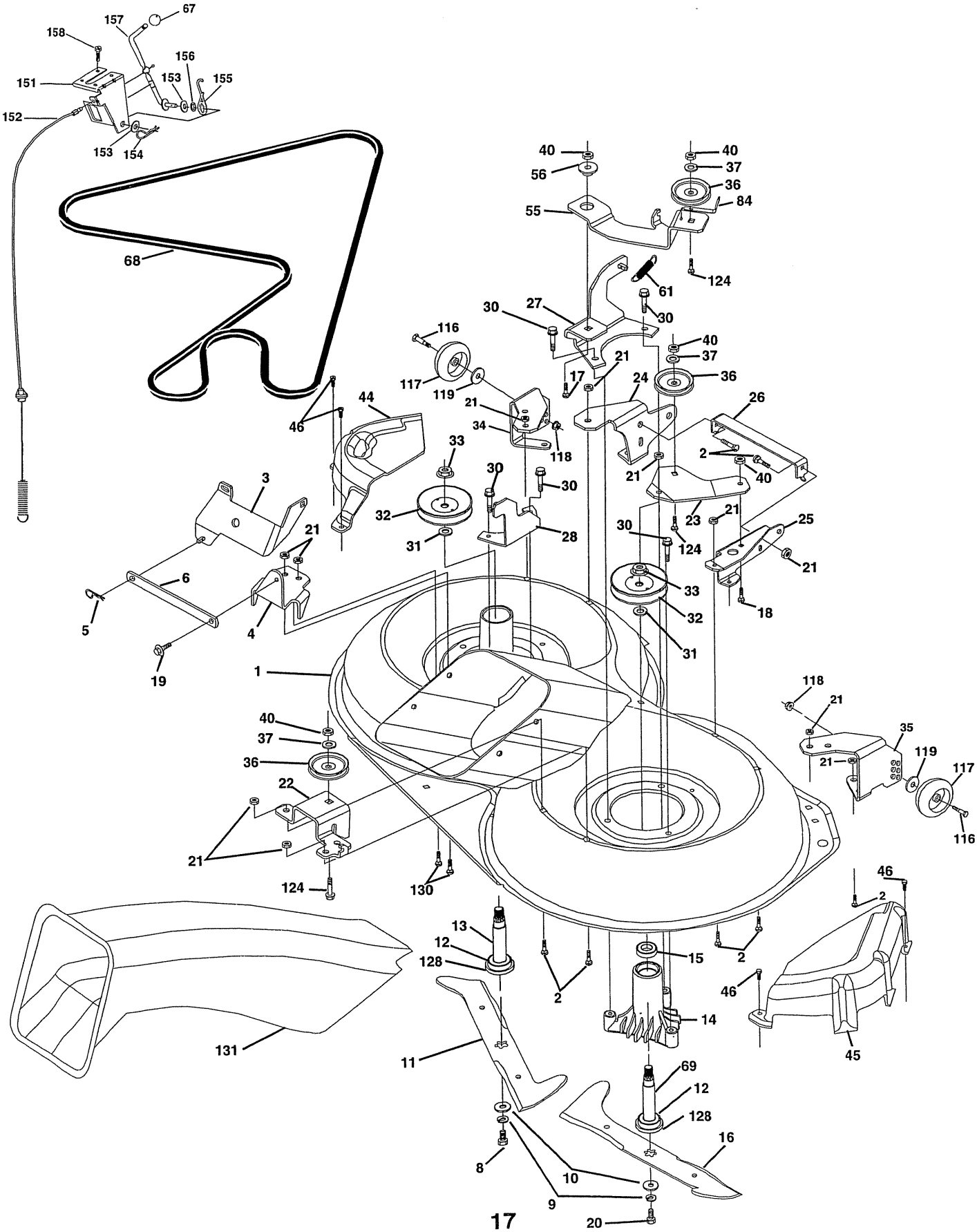

REPAIR PARTS

TRACTOR- -MODEL NO. BL1536RBH (BL1536RBHA) PRODUCT NO. 954 21 00-28

MOWER DECK

KEY NO.	PART NO.	DESCRIPTION
1	165552	Housing Asm. Mower 92 CRD
2	72140506	Bolt Rdhd Sqnk 5/16-18 Unc x 3/4
3	165569	Bracket Asm. S-Bar Chass 92 CRD
4	165558	Bracket Bar Sway Deck 92 CRD
5	4939M	Retainer Spring
6	165557	Bar Sway 92 CRD
8	850857	Bolt 3/8-24 x 1.25 Gr8 Patched
9	10030600	Washer Lock Hvy 3/8 Unplated
10	140296	Washer Hard Blade Mower vented
11	170037	Blade 3-1 Lh 92 CRD
12	129895	Bearing Ball #6204 (Mandrel)
13	137645	Shaft Asm. W/Lower Bearing
14	128774	Housing Mandrel Vented (Machd)
15	110485X	Bearing Ball Mandrel
16	170038	Blade 3-1 Rh 92 CRD
17	72140610	Bolt Carriage 3/8-16 x 1-1/4
18	72110608	Bolt Rdhd Sqnk 3/8-16 x 1 Gr5
19	132827	Bolt Shoulder 5/16-18 Thd Form
20	165484	Bolt 3/8-24 x 1.25 Gr8 Ptch Lhthd
21	73680500	Nut Crown Lock 5/16-18
22	165243	Bracket Idler Sprt RR 92 CRD
23	165446	Bracket Idler Sprt RF 92 CRD
24	165242	Bracket Suspension LF 92 CRD
25	165244	Bracket Suspension RF 92 CRD
26	165237	Brace Support Susp Frt CRD
27	165568	Bracket Asm. Susp RR 92 CRD
28	165567	Bracket Asm. Susp LR 92 CRD
30	157722	Screw Thd Rolling Washer Head
31	129963	Washer Spacer Mower Vented
32	153531	Mandrel Pulleys 36 & 46
33	137266	Nut Flg Top Lock Cntr B 9/16
34	165239	Bracket Gauge Wheel Lf 92 CRD
35	165238	Bracket Gauge Wheel Rf 92 CRD
36	146763	Pulley Idler V-Groove Dim 4.25
37	19131316	Washer 11/32 x 13/16 x 16 Ga
40	73680600	Nut Crownlock 3/8-16 Unc
44	165724	Cover Mandrel Lh 92 CRD
45	165556	Cover Mandrel Rh 92 CRD
46	137729	Screw Thd Roll 1/4-20 x 5/8
55	165445	Arm Idler 92 CRD
56	165723	Spacer Retainer Mower
61	165945	Spring Tension Belt
67	106932	Knob Rd 3/8-16 Plstc Thds Blk
68	165555	Hex-Belt 92 Mower 105AA
69	165482	Shaft Asm W/Lwr Brg Rh Thd CRD
84	156085	Keeper Belt Idler
116	137644	Bolt Shoulder
117	133957	Wheel Gage Donut Wide
118	73930600	Nut Centerlock 3/8-16 Unc
119	19121414	Washer 3/8 x 7/8 x 14 Ga.
124	72110612	Bolt Carr Sh 3/8-16 x 1-1/2 Gr5
128	153390	Washer Felt
130	72110506	Bolt Rdhdsqnk 5/16-18 Unc x 3/4
131	165661	Chute Bagger CRD 92cm
151	169670	Bracket Clutch Cable
152	170300	Cable Clutch CRD Service
153	169674	Washer Flat 3/8" Type B
154	169675	Spring Retainer
155	169671	Spring Retention Lvr Clutch Cable
156	169672	Spacer Clutch Cable
157	169669	Rod Clutch Cable 3/8"
158	17720410	Screw Hex Thd Cut 1/4-20 x 5/8
–	130794	Mandrel Asm Service
–	165579	Mandrel Asm CRD Lh Threads SVC
–	165578	Deck Mower Complete

NOTE: All component dimensions given in U.S. inches
1 inch = 25.4 mm

REPAIR PARTS

TRACTOR- -MODEL NO. BL1536RBH (BL1536RBHA) PRODUCT NO. 954 21 00-28

BAGGER

KEY NO.	PART NO.	DESCRIPTION
1	165249	Tube Handle Bagger CRD
2	72140416	Bolt Carriage 1/4-20 x 2.0 Gr.5
3	123976X	Nut Lock 1/4 Lge Flg Gr. 5 Zinc
4	169916	Handle Bagger w/lvrs Blk CRD
5	74981024	Screw Pan Head #10-24 x 1.50 Blk
6	74981032	Screw Pan Hd
7	73401000	Nut Wiz Lock Hex Serr Hd 10-24
8	165715X421	Cover Bagger Plastic CRD
9	72140418	Bolt Carriage 1/4-20 x 2.25d x Gr.5
10	169688	Tube Support Bagger CRD
11	165719	Bracket Support Upper Bag CRD
12	169685	Bracket Horiz Adj Bagger Lh CRD
13	72110606	Bolt Rdhd Sht Sqnk 3/8-16 x 3/4
14	74520640	Bolt Hex 3/8-16 x 2-1/2 Gr.5
15	4939M	Retainer Spring
16	73900600	Nut Lock Flg 3/8-16 Unc
17	72140506	Bolt Rdhd Sht Sqnk 5/16 -18 Unc x 3/4
18	19111216	Washer 11/32 x 3/4 x 16 Ga.
19	73800500	Nut Lock Hex W/Ins 5/16-18 Unc Pl
20	169684	Bracket Horiz Adj Bagger RH CRD
21	165780	Bag Asm CRD
22	165781	Bracket Side Bagger CRD
23	165782	Tube Upper Bagger CRD
24	165783	Tube Pivot Bagger CRD
25	165784	Tube Front Bagger CRD
26	165785	Tube Lower Bagger CRD
27	169692	Bushing Snap Bagger CRD
28	165787	Grip Handle Black
29	165839	Plate Stop Bagger handle CRD
30	72140410	Bolt Carriage 1/4-20 x 1 Gr.5
31	4497H	Retainer Spring 1" Zinc/Cad
32	126875X	Rivet Rd Hd Drilled 3/8 Dia
33	165571	Plug Mulcher
34	165570	Handle Mulcher
35	165572	Pin Mulcher 92/107 CRD
36	19132016	Washer 13/32 x 1-1/4 x 16Ga
38	72010520	Bolt 5/16-18 x 2.50
39	169999	Seal 26" (Long)
40	170000	Seal 7" (Short)
41	169683	Bracket Vert Adj Bggr CRD

NOTE: All component dimensions given in U.S. inches
1 inch = 25.4 mm

REPAIR PARTS

TRACTOR- -MODEL NO. BL1536RBH (BL1536RBHA) PRODUCT NO. 954 21 00-28
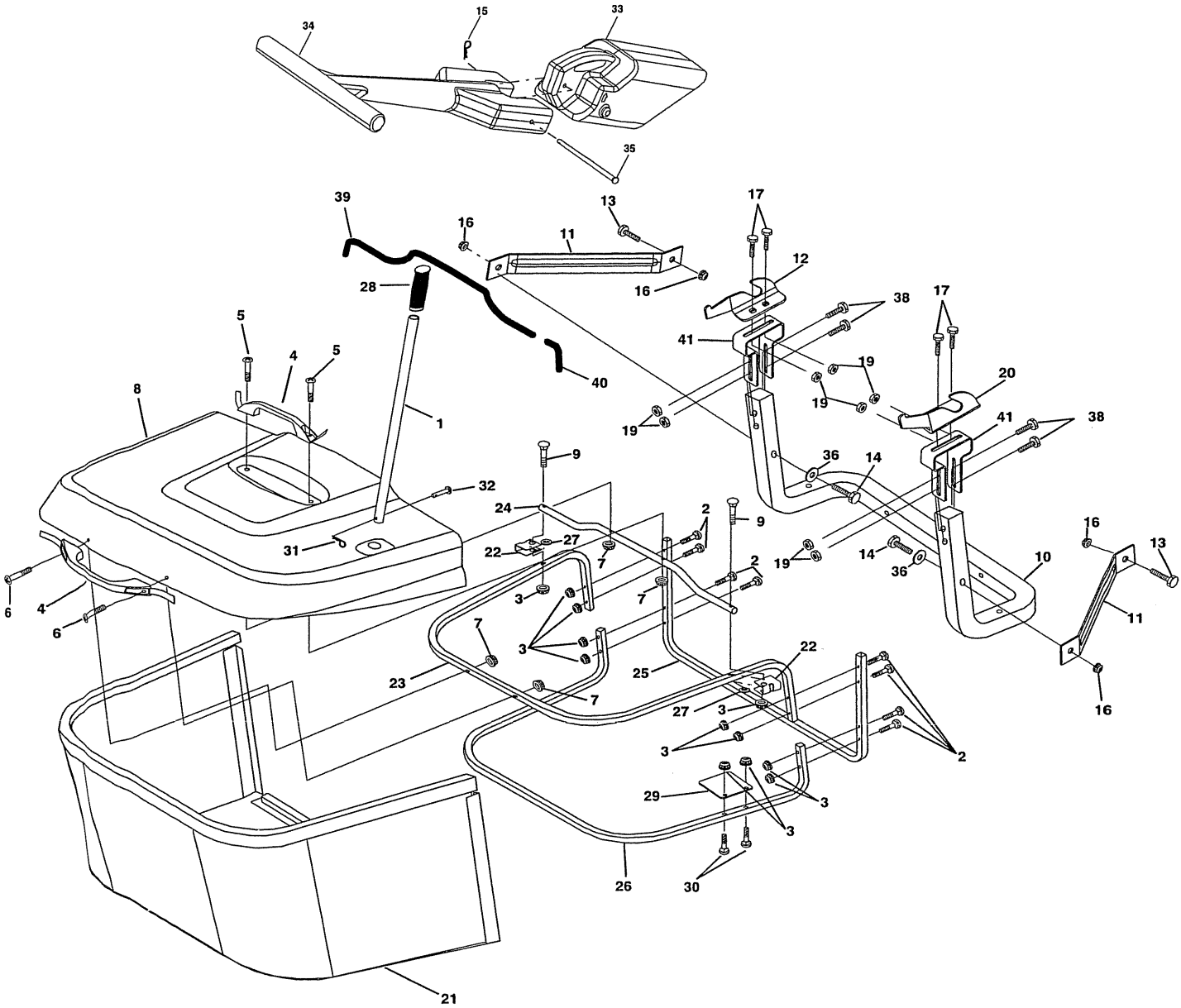
BAGGER